Honolulu Authority for Rapid Transportation (HART)
City and County of Honolulu

Special Provisions
Modifications to General Conditions
Section 8

HONOLULU RAIL TRANSIT PROJECT (HRTP)

HRTP Airport Section Utilities

Contract No. SC-HRT-1200038

Issued for Bid
December 17, 2013

Special Provisions
Honolulu Authority for Rapid Transportation

SP 3.8 DELAYS AND TIME EXTENSIONS; FORCE MAJEURE

SP 7.16 MAINTENANCE OF TRAFFIC

SP 7.17 DISCOVERY OF HAZARDOUS MATERIAL

SP 8.0 SPECIAL PROVISIONS

- 8.1 Summary of Work
- 8.2 Contractor Access to Site and Work
- 8.3 Contractor's Work Area
- 8.4 Contractor Access Dates
- 8.5 Work Performed by Others
- 8.6 Cooperation/Coordination with Work Performed by Others
- 8.7 Work Sequence and Constraints
- 8.8 Work in Secure Areas
- 8.9 Permits
- 8.10 Tree Removal and Disposition

Chapter 3 – Provisions of Hawaii Administrative Rules

SP 3.8 DELAYS AND TIME EXTENSIONS; FORCE MAJEURE

Chapter 3, Subsection 3.8(a)(2), Permits, of the General Conditions is amended by being deleted in its entirety and replaced with the following:

(2) Permits. Contractor shall be responsible for obtaining all building, grading, environmental, and/or all other necessary permits for the Project, except as otherwise specified in Section 8.9, Permits. Contractor shall not be entitled to an extension of time resulting from delay in obtaining the permits that the Contractor is responsible for obtaining. Furthermore, the Contractor shall not be entitled to an extension of time resulting from delay in permits which HART is to provide, so long as they are obtained on or prior to the dates specified in Section 8.9.

Chapter 7 – Commencement and General Performance Requirements for Construction

SP 7.16 MAINTENANCE OF TRAFFIC

Chapter 7, Subsection 7.16.2, Coordination with HDOT, of the General Conditions is amended by being deleted in its entirety and replaced with the following:

A. Coordinate Work with HDOT (Highways or Airport), as applicable, throughout the Project on a daily basis. Use MOT plans as templates to develop traffic plans for specific construction operations in accordance with the following:

1. Submit MOT plans to HDOT or their representative, as applicable, for review and approval, and obtain an HDOT permit when constructing within State right-of-way. Plans for State Highways should be submitted to HDOT Oahu District.
2. Provide a 30-day advance notice to HDOT for any and all traffic restrictions on a State Highway lane or ramp, or within the Airport.
3. Coordinate with HDOT on all details of access and egress to the Work from HDOT right-of-way, and all details of construction staging areas within HDOT right-of-way.
4. A copy of a Master Agreement between HART and HDOT will be furnished to the Contractor upon Contractor's request.
5. Obtain approval for all lane closures or restrictions within HDOT right-of-way proposed by the Contractor. These include closures or restrictions along State Highways, lanes, or ramps.
6. "Lane rental fee" applies to violations of HDOT maintenance of traffic restrictions. Contractor shall be responsible to pay for lane rental fees.
7. Obtain HDOT approval to close additional lanes, left-turn movements, and cross street movements not shown in the MOT plans. These closures may only be considered for non-peak traffic periods.

SP 7.17 DISCOVERY OF HAZARDOUS MATERIAL

Chapter 7, Subsection 7.17, Discovery of Hazardous Material, of the General Conditions is amended by modifying subparagraph 7.17.1, Item B as follows:

B. Prompt Health and Safety Action in the Affected Area is required. In the event the Contractor encounters on the site material, substances and/or waste reasonably believed to be hazardous to human health or the environment, the Contractor shall immediately take appropriate action in the area affected and report in writing the condition to HART. The work in the affected area and response to the discovery of hazardous materials, substances, and/or waste shall include all actions required by law

and actions according to the Contractor's health and safety plan. The work in the affected area shall be resumed in the absence of any hazardous materials, substances, and/or waste.

7.17.2 COOPERATION WITH HAZARDOUS MATERIALS CONTRACTOR

Chapter 7, Subsection 7.17, Discovery of Hazardous Material, of the General Conditions is amended by adding the following subparagraph:

A. HART has contracted with a Hazardous Material Contractor, who is responsible for handling of all hazardous materials. Contractor shall cooperate and share the work site with HART's Hazardous Materials Contractor.

B. If HART's Hazardous Materials Contractor has rendered the hazardous material harmless, the Contractor shall handle the material in accordance with the contract requirements.

C. If HART's Hazardous Materials Contractor cannot remediate the material at the site, it will be removed from the site by others.

D. No additional compensation will be provided for coordination with the Hazardous Materials Contractor nor for any delays caused due to this coordination.

Chapter 8 – Special Provisions

8.1 SUMMARY OF WORK

The Airport Utilities Contract consists of relocation of some utility facilities that will be impacted by the construction of the HART aerial guideway and associated facilities between Aloha Stadium and Middle Street Transit Center. Specifically, the Work involves construction of utility relocations affecting underground and overhead communications lines, Navy owned electrical lines, fuel lines, gas lines, water lines, storm sewer lines, sanitary sewer lines and street light lines and poles/fixtures; facilities to be relocated are owned by various utility companies and government agencies. The Work also includes installation of ITS (Intelligent Transportation Systems) facilities and demolition of buildings and other site improvements. Erosion control measures, temporary planting, permanent irrigation facilities and restoration of existing facilities are also incorporated into the Contractor's scope of work.

For the most part, the Work comprising this contract is within: the right of way of Kamehameha Highway (between Salt Lake Boulevard and Center Drive), the H-1 Pearl Harbor Interchange and Nimitz Highway (between Valkenburgh Street and Aolele Street; property owned by Hawaii Department of Transportation (Airports – Honolulu International Airport); right of way of Ualena Street and Waiwai Loop; property comprising Ke'ehi Lagoon Beach Park and Veteran's Park; and right of way of the H-1 Ke'ehi Interchange.

8.2 CONTRACTOR ACCESS TO THE SITE AND WORK

HART will provide legal rights to the Contractor to access the work as delineated in the Existing Right of Way Plans through right-of-way, easements or other agreements. Some of these agreements, such as Navy utility licenses, will be for a limited duration and the Contractor shall work with HART to coordinate need dates and minimize durations for access to these properties. Contractor will be required to obtain all permissions as required by these specifications and jurisdictional laws and regulations prior to mobilizing in specific locations of work. The Contractor will be responsible for acquiring any additional temporary construction easements or access permissions not shown in the Existing Right of Way Plans necessary for the Contractor's convenience or means and methods.

8.3 CONTRACTOR'S WORK AREA

8.3.1 Use of Right of Way

A. The right of way shall be used only for purposes that are necessary to perform the required work. The Contractor shall not occupy the right of way, or allow others to occupy the right of way, for purposes which are not necessary to perform the required work.
B. Residence trailers will not be allowed within the right of way or work area.
C. The Contractor shall remove all equipment, materials and rubbish from work areas which he occupies and shall leave the areas in a presentable condition, in accordance with the provisions in Section 7.30, "Cleaning", of the General Conditions and as directed by HART.

8.3.2 Staging and/or Storage Areas

A. Material/equipment storage at the site shall be limited to materials and equipment required to perform the construction currently in progress. Material/equipment shall not be stored at the site without the express permission of HART and/or the property owner.
A. Contractor is responsible for determining requirements for and obtaining all staging and/or material storage areas necessary for the project. The Contractor shall make all necessary agreements with property owners for staging areas. The Contractor will be responsible for acquiring any and all permits and clearances necessary for that use, including, but not limited to those required by regulatory agencies for archeological, wetland, biological, and other issues (i.e., land use, noise, hazmat).
B. The protection of stored Materials is the Contractor's responsibility. HART is not liable for any loss of materials, by theft or otherwise, or for any damage to stored materials.
C. The Contractor shall be responsible for maintaining staging areas in accordance with Section 7.3, "Cleaning", of the General Conditions and as directed by HART. Waste materials, debris, and rubbish from the site shall be removed as soon as such materials become unfit for use. Upon completion of the Work, the Contractor shall restore the staging area to a condition equal to or better than existing. All damages shall be repaired by the Contractor at no cost to HART.

8.4 CONTRACTOR ACCESS DATES

Except as described below, the Contractor will be allowed access to properties indicated in the Existing Right of Way Plans upon issuance of the Notice to Proceed. The Contractor is advised that HART does not yet hold title, easements, rights of access or regulatory approval for several properties necessary to complete the work included in this contract. Properties that are currently unavailable are identified in Table 8.4-1. The estimated availability dates shown are the earliest expected date when the property will become available to the Contractor. These access dates must be considered in the Contractor's work plan and schedule. Delays in availability beyond the dates shown below for access to these properties will not be considered a Cause of Delay or Time Extension as described in Section 3.8(a)(1) unless the Contractor can demonstrate that the inability to access such properties are on the critical path and affect the completion date of the project.

Table 8.4-1
Availability of Right of Way

TMK Number	Date Available
9-9-003:066	3/1/2014
9-9-002:004	5/1/2014
9-9-001:008	5/1/2014
1-1-010:003	5/1/2014
1-1-016:014	3/1/2014
1-1-016:006	1/1/2015
1-1-016:005	1/1/15
1-1-003:006	7/1/2014
1-2-013:021	8/1/2014

8.5 WORK PERFORMED BY OTHERS

A. Utility relocations in the Construction Documents shall be performed either by the Contractor or by the designated utility company or agency. Except as noted below, construction of all utility relocations (including, but not limited to, site work, materials, installation and testing) is the responsibility of the Contractor. In addition, any concrete pads shown to support utility equipment shall be furnished in place by the Contractor.

B. The following utility work will be performed by others unless noted otherwise in the plans:

1) Oceanic Time Warner Cable (OTWC) –Cabling and electronic equipment will be provided by OTWC, and will be installed/connected/tested by OTWC in conduit/duct banks/vaults/manholes/pull boxes constructed by the Contractor or mounted on overhead poles provided by others.
2) AT&T Corporation (AT&T) – Cabling and electronic equipment will be provided by AT&T, and will be installed/connected/tested by AT&T in conduit/duct banks/vaults/manholes/pull boxes constructed by the Contractor.
3) AT&T Government Solutions (AT&TGS) -- Cabling and electronic equipment will be provided by AT&TGS, and will be installed/connected/tested by AT&TGS in conduit/duct banks/vaults/manholes/pull boxes constructed by the Contractor.
4) Hawaiian Electric Company (HECO) -- Cabling and electrical equipment will be provided by HECO, and will be installed/connected/tested by HECO in conduit/duct banks/vaults/manholes/pull boxes constructed by the Contractor or mounted on overhead poles provided by others.
5) Sandwich Isles Communications (SIC) -- Cabling and electronic equipment will be provided by SIC, and will be installed/connected by SIC in conduit/duct banks/vaults/manholes/pull boxes constructed by the Contractor.
6) Hawaiian Telecom, Inc. (HTI) -- Cabling and electronic equipment will be provided by HTI, and will be installed/connected/tested by HTI in conduit/duct banks/vaults/manholes/pull boxes constructed by the Contractor or mounted on overhead poles provided by others.
7) Hawaii Gas Company (HGC) – Pipes, valves and other gas equipment will be provided, installed/connected/tested by HGC in trenches excavated, bedded and backfilled by the Contractor.

8.6 COOPERATION/COORDINATION WITH WORK PERFORMED BY OTHERS

Other contractors will be performing work in the project area which may be in progress at the same time as this contract:

- Utility work performed by others in conjunction with this contract as described in Section 8.5
- HART Airport and City Center Guideway and Utilities contract
- HART Airport Stations Group contract
- HART Kamehameha Highway Guideway Design-Build contract
- HART Hazardous Materials Contractor
- Hawaii Department of Transportation (Airport) CONRAC (Consolidated Car Rental Facility) contract
- Hawaii Department of Transportation (Airport) Mauka Terminal Expansion Project contract

In addition to the specific activities listed above, the Contractor is advised that the Hawaii Department of Transportation (Highway), Hawaii Department of Transportation (Airport), City and County of Honolulu and private utility companies and property owners may have various projects ongoing in and around the project area during the duration of this contract.

The Contractor must coordinate with others in sharing the site and schedule the work of its forces as necessary to avoid conflicts.

8.7 WORK SEQUENCE AND CONSTRAINTS

The following sequences of work shall apply:

A. The order of Work shall conform to the Contractor's approved schedule and detailed work plans. The Contractor shall develop its schedule such that inconvenience to traffic, pedestrians and adjacent businesses/landowners is minimized.
B. Install travel time system (including temporary and permanent LPR cameras and portable DMS) prior to any construction activity impacting existing traffic operations or within 60 days following Contractors notice-to-proceed, whichever occurs first.
C. The Contractor shall make probing of existing utilities the first order of work as rights of way/easements become available for use.
D. The Contractor shall, only upon receipt of required materials, begin to prepare the sites for construction. No work may begin at any site until the receipt materials or impending receipt of materials is submitted and approved by HART.
E. In areas to receive asphalt concrete overlays or new pavement sections, all work involving pavement cuts, including installation of traffic signal conduits, loops and hand holes or new pavement sections shall be completed prior to placing the final lift of asphalt concrete pavement.
F. To the extent possible, work requiring the temporary relocation of a fence line within a specific secure area, as described in Section 8.9, shall be executed so as to minimize the duration of the temporary fence relocation. Reconstruction of the permanent security fence shall be completed as quickly as possible after completion of the utility relocation work at the specific site.

8.8 WORK IN SECURE AREAS

8.8.1 Work Locations Subject to Security Requirements

Work in the following areas may require access to secure areas controlled by the United States Navy or Honolulu International Airport (Hawaii Department of Transportation – Airport):

Guideway Station and Side	Property Owner	Utility Work
Station 1005+00+/- Left	Navy	HTI Communication Line Relocation
Station 1015+80+/- Left and Right	Navy	Navy Electric Relocation
Station 1047+00+/- Right	Navy	HTI Communication Line Relocation
Station 1059+50+/- Right	Navy	Navy Electric Relocation
Station 1117+90+/- Right	HDOT Airport	Drainage Relocation and Manhole

In addition to work within their security fence lines, the Honolulu International Airport maintains a secure zone up to 4 feet outside their fence lines.

8.8.2 Contractor's Compliance with Security Rules

The Contractor is advised that it must comply with the security protocols in place for the work locations identified in Subsection 8.8.1, which are available from the affected agencies.

A. For Honolulu International Airport secured areas, the protocols are outlined in the Honolulu International Airport Contractor's Training Guide

B. For United States Navy secured areas, meet requirements for construction within Department of Defense secure areas. Work schedules and security measures must be coordinated with the NAVFAC Hawaii Assistant Public Works Officer (APWO) responsible for the impacted geographic area.

The Contractor is responsible for all costs associated with working in the secured areas, including, but not limited to, the cost of temporary fencing, agency escorts, badging, inspections, etc. No additional compensation will be provided for complying with agency security requirements.

8.9 PERMITS

8.9.1 Compliance

The Contractor shall comply with all permit requirements and conditions including but not limited to all Federal, State and Local authorities as though they were specified herein, at no additional cost to the HART or said authorities. In the event of a conflict between the Contract Documents and any permit requirement, the more stringent shall prevail. Local codes and permit conditions are incorporated by reference herein.

8.9.2 HART Obtained Permits

HART will furnish the permits listed in Table 8.9.2-1, titled "HART Obtained Permits," within the time frame noted in the table. The start of construction is sensitive to obtaining the noted permits; as such the Contractor shall support the HART's efforts to secure all of the HART provided permits. All permits listed as being obtained by the HART in Table 8.9.2-1 are based on design provided in the Contract Documents. There are conditions in the HART obtained permits that may require additional notifications to the permitting agencies. The Contractor shall be responsible to provide any additional information required for the HART obtained permits. Should the Contractor's means and methods require permit modifications or additional permits, the Contractor will be responsible for obtaining those permits in consultation with HART at no additional cost to HART.

Table 8.9.2-1

HART Obtained Permits

Permit or Agency Submittal	Agency	Date Received by Agency
NPDES NOI-C	Department of Health Clean Water Branch	10/01/13
Municipal Separate Storm Sewer System*	Hawaii Department of Transportation, Highway Division	12/17/13**
Municipal Separate Storm Sewer System*	Hawaii Department of Transportation, Airports Division	07/09/13
Municipal Separate Storm Sewer System*	United States Navy	11/25/13
Municipal Separate Storm Sewer System*	City and County of Honolulu	03/05/14**
State Energy Corridor	DOT Harbors	12/31/13**

Noise Permit	Department of Health, Noise Section	03/05/14**
Noise Variance	Department of Health, Noise Section	03/31/14**
Special Management Area (SMA) Permit	City & County of Honolulu, Department of Planning and Permitting	09/11/13
Section 9 RHA clearance	United States Coast Guard	07/05/12

*Does not include dewatering or hydrotesting permits, which are to be obtained by the Contractor

** Estimated date of approval

8.9.3 Contractor Obtained Permits and Requirements

The Contractor shall obtain and pay for all other permits required for the performance of the Work. It is the responsibility of the Contractor to obtain necessary permits in a timely manner such that obtaining these permits is not a cause for claim for delay due to impacts to Baseline Schedule.

8.10 TREE REMOVAL AND DISPOSITION

Tree Disposition tables in the contract plans indicate which trees should be transplanted. However, the new locations for salvaged trees are indicated as “TBD by HART”. Contractor will be directed to either plant trees within containers and deliver them to a storage location or transplant the trees within 30 miles of the project site; container planting or replanting at the site shall be in accordance with Technical Specification 31 13 19, Tree Salvage and Storage. Contractor’s bid price shall account for either transplanting option without additional compensation.

Honolulu Authority for Rapid Transportation (HART)
City and County of Honolulu

Technical Specifications

HONOLULU RAIL TRANSIT PROJECT (HRTP)

HRTP Airport Section Utilities

Contract No. SC-HRT-1200038

Issued for Bid
December 17, 2013

TABLE OF CONTENTS

VOLUME 1

DIVISION 02 – EXISTING CONDITIONS

02 21 00 Surveys
02 26 00 Hazardous Material Assessment
02 41 00 Demolition
02 61 01 Removal and Disposal of Contaminated Materials
02 82 33 Removal and Disposal of Asbestos Containing Materials
02 83 33 Removal and Disposal of Material Containing Lead
02 84 33 Removal and Disposal of Polychlorinate Biphenyls

DIVISION 03 – CONCRETE

03 05 15 Portland Cement Concrete
03 11 00 Concrete Forming
03 11 14 Concrete Falsework
03 15 00 Concrete Accessories
03 15 10 Concrete Anchors
03 15 13 Waterstops
03 20 00 Concrete Reinforcing
03 30 00 Cast-In-Place Concrete
03 35 00 Concrete Finishing
03 40 00 Precast Concrete
03 60 00 Grouting

DIVISION 05 – METALS

05 05 23 Metal Fastenings
05 58 00 Formed Metal Fabrications

DIVISION 09 – FINISHES

09 91 00 Painting
09 96 23 Graffiti Resistant Coating
09 97 13 Steel Coatings

DIVISION 26 – ELECTRICAL

26 05 00 Common Work Results for Electrical
26 05 19 Low-Voltage Electrical Power Conductors and Cables
26 05 23 Underground Ducts and Raceways for Electrical Systems
26 05 26 Grounding and Bonding for Electrical Systems
26 05 33 Raceway and Boxes for Electrical Systems
26 05 48 Vibration and Seismic Controls for Electrical Systems
26 05 53 Identification for Electrical Systems
26 08 10 Testing of Electrical Systems
26 28 16 Enclosed Switches and Circuit Breakers
26 42 01 Corrosion Control and Cathodic Protection
26 42 02 Corrosion Control Systems Testing
26 56 19 Roadway Lighting

DIVISION 27 – COMMUNICATIONS

27 60 00 Intelligent Transportation Systems

DIVISION 31 – EARTHWORK

31 11 00 Clearing and Grubbing
31 13 19 Tree Salvage and Storage
31 20 00 Earth Moving
31 23 00 Structure Excavation and Backfilling
31 23 19 Dewatering
31 32 00 Soil Stabilization
31 50 00 Excavation and Support Protection
31 62 00 Driven Piles

DIVISION 32 – EXTERIOR IMPROVEMENTS

32 11 00 Base Courses
32 12 00 Flexible Paving
32 13 00 Rigid Paving
32 16 13 Concrete Curbs and Gutters
32 17 23 Pavement Markings
32 19 00 Sidewalks and Driveways
32 31 00 Fences and Gates
32 71 15 Guardrail and Impact Attenuators
32 80 00 Irrigation
32 90 00 Planting

DIVISION 33 – UTILITIES

33 05 16 Utilities Casings
33 05 25 Maintenance of Existing Utilities
33 10 00 Water Utilities
33 30 00 Sanitary Sewerage Utilities
33 40 00 Storm Drainage Utilities
33 51 00 Gas Distribution Utilities
33 52 00 Fuel Distribution Utilities
33 70 00 Electrical Utilities
33 80 00 Communication Utilities

DIVISION 34 – TRANSPORTATION

34 01 13 Operation and Maintenance of Roadways
34 41 00 Roadway Signaling and Control Equipment

END OF SECTION

SECTION 02 21 00
SURVEYS

PART 1 – GENERAL

1.01 SUMMARY

A. Description: This Section includes surveying and staking out the Work including verifying and establishing lines, grades, dimensions, and elevations.

B. Section Includes:

1. Survey, Construction Stakes, Lines and Grades
2. Centerline and Reference Survey Monuments
3. Street Survey Monuments

1.02 REFERENCES

A. State of Hawaii Department of Transportation Standard Specifications (HSS):

1. HSS Section 105.10 Construction Stakes, Lines and Grades
2. HSS Section 613 Centerline and Reference Survey Monuments
3. HSS Section 614 Street Survey Monuments
4. City and County of Honolulu/Federal Projects Special Provision to Section 613, June 9, 2006

1.03 QUALITY ASSURANCE

A. General: Refer to Section 7.10 – Quality Assurance, for quality assurance requirements and procedures.

PART 2 – PRODUCTS

2.01 MATERIALS

A. Centerline and Reference Survey Monuments: Conform to HSS Subsection 613.02 – Materials.

B. Standard Survey Monuments: Conform to HSS Subsection 614.02 – Materials.

PART 3 – EXECUTION

3.01 SURVEYING, CONSTRUCTION STAKES, LINES AND GRADES

A. Survey and stake out the work in accordance with HSS Subsection 105.10 – Construction Stakes, Lines and Grades. HART will furnish control points for the project in accordance with HSS Subsection 105.10(B) – Survey and Staking Requirements.

3.02 CENTERLINE AND REFERENCE SURVEY MONUMENTS

A. Construct, adjust and reconstruct centerline and reference survey monuments in accordance with HSS Subsection 613.03 – Construction and in accordance with HSS City and County of Honolulu/Federal Projects Special Provision to Section 613 dated June 9, 2006.

3.03 STREET SURVEY MONUMENTS

A. Construct, adjust, and reconstruct standard survey monuments in accordance with HSS Subsection 614.03 – Construction.

END OF SECTION

SECTION 02 26 00

HAZARDOUS MATERIAL ASSESSMENT

PART 1 – GENERAL

1.01 SUMMARY

A. Description:

1. This Section includes requirements for field screening to evaluate whether materials encountered or generated during site work contain hazardous or contaminated substances. Conduct field screening in all areas where contamination is known or suspected. Include the following in field screening techniques: visual and olfactory observations, and photoionization detector (PID) or flame ionization detector (FID) measurements. Colorimetric screening tests and/or immunoassays may also be used if appropriate. Conduct hazardous and contaminated substance screening.

2. Should any potentially hazardous substances or contaminated materials be found, Contractor shall stop work in the area, secure the immediate area, and immediately notify HART. HART will investigate any potentially hazardous or contaminated materials and remove or otherwise render them safe prior to the Contractor resuming work in the area.

3. Contaminants of concern may include petroleum hydrocarbons (gasoline, diesel, and oil-range), volatile organic compounds (VOCs) such as vinyl chloride, trichloroethylene (TCE), tetrachloroethylene (PCE), polynuclear aromatic hydrocarbons (PAHs), metals, and potentially hazardous unidentified fluids stored in miscellaneous containers. Some of these substances and locations where there is a greater likelihood of impacted materials are discussed in the *Phase II Environmental Site Assessment* (AECOM 2013).

4. Provide reasonable assistance to HART as directed. Such assistance includes providing access to document site activities and collect soil and water samples. Such assistance may also include operating a backhoe assist HART in collecting samples.

B. Section Includes:

1. Screening of Materials

2. Action Levels

3. Equipment Calibration

C. Related Sections:

1. Section 02 61 01 – Removal and Disposal of Contaminated Materials

1.02 REGULATORY REQUIREMENTS AND GOVERNMENTAL REFERENCES

A. Department of Transportation Services (DTS):

1. DTS 2008 — Hazardous Materials Technical Report, Honolulu High-Capacity Transit Corridor Project, dated August 15, 2008

B. State of Hawaii Department of Health (HDOH):

1. HDOH 1997 Technical Guidance Manual for the Implementation of the Hawaii State Contingency Plan, HDOH Hazard Evaluation & Emergency Response (HEER) office, October 1997 (Draft Edition)

C. Related Reference Studies

1. Phase I Environmental Site Assessment, 515 Lagoon Drive, TMK Number: (1) 1-1-016:015, Honolulu, O'ahu, Hawai'i, (AECOM May 2013)

2. Phase II Environmental Site Assessment, 515 Lagoon Drive, TMK Number: (1) 1-1-016:015, Honolulu, O'ahu, Hawai'i, (AECOM June 2013)

1.03 GENERAL REQUIREMENTS

A. Implement a hazardous and contaminated substance screening program to ensure that potentially contaminated materials are identified in accordance with applicable environmental regulations. Hazardous and contaminated substances include those defined in the General Conditions. In conducting hazardous and contaminated substance screening, utilize the information and procedures provided in these Specifications and applicable regulatory guidance. Petroleum hydrocarbons and waste containing PCE were stored on the property when it was being used as a dry cleaning facility from 1969 to 1997. Petroleum hydrocarbons and dry-cleaning related chemicals were detected in site soil and groundwater during a Phase II Environmental Site Assessment in 2013 (see Section 1.03) but only at concentrations that were below Hawaii Department of Health (HDOH) environmental action levels (EALs). Contaminated materials including but not limited to soil containing petroleum hydrocarbons, PCE, and other dry-cleaning related chemicals may be encountered while work is being performed at the property.

1.04 SUBMITTALS

A. General: Refer to Section 7.7– Submittal Procedures, and Section 7.8 – Shop Drawings, Product Data, and Samples, for submittal requirements and procedures.

B. Submit a Hazardous and Contaminated Substance Screening Plan, including standard operating procedures (SOPs) for field screening for review and comment by HART. The Screening Plan should generally follow the guidelines presented in the Technical Guidance Manual for the Implementation of the Hawaii State Contingency Plan (HDOH 1997). This plan may be submitted for City review and acceptance as part of the site Hazardous and Contaminated Material Health and Safety Plan (HCMHSP).

C. During construction, at a frequency requested by HART but not less frequently than monthly, and at the completion of construction, submit complete documentation of field screening efforts and data.

PART 2 – PRODUCTS

2.01 EQUIPMENT

A. Utilize a PID or FID to perform the Work in this Section. The PID/FID shall be equipped with a 10.6 eV lamp to detect PCE, TCE, and vinyl chloride for headspace analysis of soil.

B. Colorimetric Field Screening Kit. A kit (such as a Hanby kit or RemediAid kit) may be used in addition to the PID/FID to screen for aromatic compounds, including benzene, toluene, ethylbenzene, and xylenes (BTEX), gasoline, and diesel. This screening method includes extraction of aromatic compounds from the sample, and provides a colorimetric indication of the concentration and type of contaminants present.

C. Immunoassay Test Kit. An immunoassay test kit may be used in addition to the PID/FID to screen petroleum compounds, PCBs, and PAHs. This screening method depends on the ability of antibodies (analytes) to specifically bind to an antigen (compound). Test results are measured visually or by a special instrument.

PART 3 – EXECUTION

3.01 ACTION LEVELS

A. Site-specific action levels will be determined for each work location, dependent on the specific contaminants expected at each location. Examples of possible action levels for petroleum-impacted soil include current HDOH Office of Solid Waste Management soil reuse standards and HDOH Tier 1 risk-based environmental action levels (EALs).

B. Permissible Exposure Limit (PEL): Are enforceable exposure limits set by the U.S. Department of Labor, Occupational Safety & Health Administration (OSHA).

C. If headspace measurements are greater than the screening action level, if significant staining is present, or if other evidence of contamination is observed, Contractor shall stop work in the area, secure the immediate area, and immediately notify HART. HART will investigate any potentially hazardous or contaminated materials and remove or otherwise render them safe prior to the Contractor resuming work in the area. Proceed in accordance with Special Provision 7.17.

D. If field screening data indicate concentrations are less than the screening action level, the material may be considered non-contaminated and managed as non-contaminated material.

3.02 EQUIPMENT CALIBRATION

A. The PID/FID and any other screening method or instrument that requires calibration shall be calibrated as specified in instrument user manuals.

3.03 SAMPLING RECORDS

A. To provide complete documentation, maintain records of field screening data. Include source sample locations, associated equipment calibrations, and field screening results in documentation.

END OF SECTION

SECTION 02 41 00

DEMOLITION

PART 1 – GENERAL

1.01 SUMMARY

A. Description: This Section includes requirements for razing, removing, salvaging or disposing of buildings, foundations, bridges, walls, fences, structures, old pavements, abandoned pipelines or utilities, and other structures and obstructions designated for removal.

B. Section Includes:

1. Removal of Structures and Obstructions
2. Salvaging Material and Equipment

C. Related Sections:

1. Section 02 26 00 – Hazardous Material Assessment
2. Section 02 61 01 – Removal and Disposal of Contaminated Materials
3. Section 02 82 33 – Removal and Disposal of Asbestos Containing Materials
4. Section 02 83 33 – Removal and Disposal of Material Containing Lead
5. Section 02 84 33 – Removal and Disposal of Polychlorinate Biphenyls
6. Section 26 56 19 – Roadway Lighting
7. Section 31 40 00 – Shoring and Underpinning
8. Section 31 50 00 – Excavation Support and Protection
9. Section 32 80 00 – Irrigation
10. Section 33 05 25 – Maintenance of Existing Utilities
11. Section 33 10 00 – Water Utilities
12. Section 33 30 00 – Sanitary Sewer Utilities
13. Section 33 40 00 – Storm Drainage Utilities
14. Section 33 51 00 – Gas Distribution Utilities
15. Section 33 52 00 – Fuel Distribution Utilities

D. Related Reference Studies

1. Phase II Environmental Site Assessment 515 Lagoon Drive – April 2013
2. Phase I Environmental Site Assessment 2676 Waiwai Loop – May 2013

3. Phase I Environmental Site Assessment 2668 Waiwai Loop – May 2013
4. Phase I Environmental Site Assessment 479 Lagoon Drive/ 2604 Waiwai Loop – May 2013
5. Phase I Environmental Site Assessment 515 Lagoon Drive – May 2013

1.02 REFERENCES

A. State of Hawaii Department of Transportation Standard Specifications (HSS):

1. HSS Section 202 Removal of Structures and Obstructions
2. HSS Section 622 Roadway and Sign Lighting System
3. HSS Section 623 Traffic Signal System
4. HSS Section 631 Traffic Control Regulatory, Warning, and Miscellaneous Signs

1.03 SUBMITTALS

A. General: Refer to Section 7.7 – Submittal Procedures, and Section 7.8 – Shop Drawings, Product Data, and Samples, for submittal requirements and procedures.

B. Requirement for submittal of Earth Cover Plan in HSS Subsection 202.03(A) – Removal of Obstructions is deleted.

C. Submit Demolition Plan including procedures and operational sequence, methods and equipment for demolition, removal and disposal of structures and facilities, including salvage if required. Demolition Plan shall include procedures for backfilling and shoring and underpinning, as applicable.

1. Submit copy of request to utility companies owning or agency controlling services and appurtenances affected by demolition work for discontinuance of services along with certificates of severance over an agreed time schedule.
2. Submit demolition permit from the City.
3. Submit permit for disposal of debris.
4. Submit proposed rodent control program.

D. Submit details of bridge removal operations in accordance with HSS Subsection 202.03(C) – Removal of Bridges.

E. Submit details of cleaning and backfilling where abandonment in place is required.

F. Submit receipts documenting off-site disposal in accordance with the Contract.

G. Submit Record Drawings indentify and accurately locate capped utilities and other subsurface structural, electrical, or mechanical conditions.

1.04 QUALITY ASSURANCE

A. General: Refer to Section 7.10 – Quality Assurance, for quality assurance requirements and procedures.

PART 2 – PRODUCTS

2.01 MATERIALS

A. Material for Sealing Pipes to be Abandoned: Conform to HSS Subsection 202.02 – Material.

PART 3 – EXECUTION

3.01 REMOVAL OF STRUCTURES AND OBSTRUCTIONS

A. Removal of Buildings:

1. Buildings to be demolished will be vacated and their use discontinued before start of Work.
2. Verify all utilities have been disconnected and capped.
3. Survey conditions of the building to determine whether removing any element might result in a structural deficiency or unplanned collapse of any portion of the structure or adjacent structures during demolition.
   a. Retain a license contractor and qualified civil or structural engineer to provide analysis, including calculations, necessary to ensure the safe execution of the demolition work.
4. Demolish buildings in place, unless otherwise approved by HART.
5. Demolish in an orderly and careful manner, as required to accommodate new work, including that required for connection to existing features. Protect existing structural members.
6. Perform demolition in accordance with applicable rules of the City and State.
7. Rebuild and repair demolition performed in excess of that required at the Contractor's expense.
8. Undertake rodent control and extermination program in demolition areas.
9. Unless otherwise shown, dispose of building materials, fixtures, and equipment in, attached to, or belonging to buildings and structures to be demolished.
10. Undertake rodent control and extermination program in demolition areas.
11. Storage or sale of removed items or materials on-site will not be permitted without advance written approval from HART.
12. Party walls:

a. Where building wall being demolished is a party wall with another building not to be demolished, prevent damage to other building, and avoid interference with its occupants.

b. Restore and waterproof exposed party walls in accordance with applicable building code for exterior walls of particular type of construction involved.

c. Effective remedial measures for anchoring, bracing, or buttressing so that existing party walls do not become unsafe and dangerous because of demolition operation. If such work does not correct unsafe or dangerous conditions, remove and replace wall and perform necessary work to properly enclose the structure that is to remain standing, at no cost to the owner of such property.

13. Completely remove buildings and structure foundations, footings, piles, and foundation systems. Existing pavement sections in areas to be regraded or filled shall be removed.

14. Disconnect, cut, and cap utility services to facilities to be removed or demolished. See Article 3.01D for abandonment of pipelines on Hawaii Department of Transportation properties.

15. Provide shoring, underpinning, and excavation support in accordance with Section 31 40 00 – Shoring and Underpinning and Section 31 50 00 – Excavation Support and Protection.

16. Completely fill below-grade areas and voids resulting from building demolition operations to street level with satisfactory soil material.

17. All erosion control methods are to be maintained and kept in satisfactory condition throughout the demolition operations per the design plans.

18. Contractor to provide permanent erosion control and landscaping on the site per the design plans.

19. Conduct demolition operations and remove materials to ensure minimum interference with roads, streets, walks, and other adjacent occupied and utilized facilities.

20. Conduct demolition operations to prevent injury to people and damage to adjacent buildings and facilities to remain. Ensure safe passage of people around demolitions area.

    a. Erect temporary protection, such as walks, fences, railings, canopies, and covered passageways, where required by authorities having jurisdiction.

    b. Contractor shall restore ADA accessibility if previous condition provided accessibility.

B. Hazardous Materials:

1. Where contamination is known or suspected, conduct field screening for impacted materials in accordance with Section 02 26 00 – Hazardous Material Assessment.

2. When applicable remove and dispose of contaminated materials in accordance with Section 02 61 01 – Removal and Disposal of Contaminated Materials, Section 02 82 33 – Removal and Disposal of Asbestos Containing Materials, Section 02 83 33 – Removal and Disposal of Material Containing Lead, and Section 02 84 33 – Removal and Disposal of Polychlorinate Biphenyls.

C. Remove structures and obstructions in accordance with HSS Subsection 202.03 – Construction, except as noted otherwise herein, or in the General Conditions requirements.

D. Pipelines and utilities facilities on any Hawaii Department of Transportation (HDOT) properties shall not be abandoned. Remove pipelines and utilities facilities where shown on the Design Plans.

E. Amend HSS Subsection 202.03(B) to include the following: Burial of broken concrete or any other demolition debris shall not be allowed within the limits of the Work.

F. In accordance with HSS Subsection 202.03(C), except that disposal of broken concrete in adjacent embankments shall not be allowed.

G. All building demolition equipment, including cranes, must remain below 40 feet above ground level (AGL), and below existing building and obstruction heights of the surrounding area. If the equipment is required to be greater than 40 feet AGL the contractor must submit a Notice of Proposed Construction or Alteration to the FAA via Form 7460.

3.02 SALVAGING MATERIAL AND EQUIPMENT

A. Clean and store regulatory, warning, and miscellaneous signs that will not be used in the Contract in accordance with HSS Section 631 – Traffic Control Regulatory, Warning, and Miscellaneous Signs. Deliver signs to the appropriate public agency as directed by HART.

B. When shown in the Design Plans, salvage roadway and sign lighting equipment in accordance with Section 26 56 19 – Roadway Lighting.

C. When shown in the Design Plans, salvage irrigation equipment in accordance with Section 32 80 00 – Irrigation.

D. Salvage signaling and control equipment in accordance with Section 34 41 00 – Roadway Signaling and Control Equipment, and Section HSS Section 623 – Traffic Signal System.

E. Salvage and reuse lava rock curbs as shown in the Design Plans or deliver unused lava rock curbs to the City's Department of Facility Maintenance baseyard, as directed by HART.

END OF SECTION

This page intentionally left blank.

SECTION 02 61 01

REMOVAL AND DISPOSAL OF HAZARDOUS SUBSTANCES

PART 1 – GENERAL

1.01 SUMMARY

A. Description:

1. This Section includes site background information and instructions should potentially hazardous substances or contaminated materials be encountered.

2. Should any potentially hazardous substances or contaminated materials be found, Contractor shall stop work in the area, secure the immediate area, and immediately notify HART. HART will investigate any potentially hazardous or contaminated materials and remove or otherwise render them safe prior to the Contractor resuming work in the area.

3. Contractor shall be responsible for any hazardous materials generated by the Contractor, at no extra cost to HART.

B. Section Includes:

1. Existing Conditions

2. General Requirements

1.02 REFERENCES

A. ASTM International (ASTM):

1. ASTM D5434 — Standard Guide for Field Logging of Subsurface Explorations of Soil and Rock

B. Department of Transportation Services (DTS):

1. DTS 2008 — Hazardous Materials Technical Report, Honolulu High-Capacity Transit Corridor Project, dated August 15, 2008

C. State of Hawaii Department of Health (HDOH):

1. HDOH 1997 — Technical Guidance Manual for the Implementation of the Hawaii State Contingency Plan, HDOH Hazard Evaluation & Emergency Response Office, October 1997 (Draft Edition)

2. HDOH 2000 — Technical Guidance Manual for Underground Storage Tank Closure and Release Response, HDOH Solid and Hazardous Waste Branch, March 2000 (Second Edition)

D. Related Reference Studies

1. Phase I Environmental Site Assessment, 515 Lagoon Drive, TMK Number: (1) 1-1-016:015, Honolulu, O'ahu, Hawai'i, (AECOM May 2013)

2. Phase II Environmental Site Assessment, 515 Lagoon Drive, TMK Number: (1) 1-1-016:015, Honolulu, O'ahu, Hawai'i, (AECOM June 2013)

3. Draft Hazardous Materials Survey Report, 515 Lagoon Drive, Honolulu, O'ahu, Hawai'i, (AECOM September 2013)

1.03 REGULATORY REQUIREMENTS

A. Code of Federal Regulations (CFR):

1.	29 CFR 1910	Occupational Safety and Health Standards
2.	40 CFR 262	Standards Applicable to Generators of Hazardous Waste
3.	40 CFR 264	Standards for Owners and Operators of Hazardous Waste Treatment, Storage, and Disposal Facilities
4.	40 CFR 268	Land Disposal Restrictions
5.	40 CFR 280	Technical Standards and Corrective Action Requirements for Owners and Operators of Underground Storage Tanks (UST)
6.	40 CFR 302	Designation, Reportable Quantities, and Notification

B. Hawaii Administrative Rules (HAR):

1.	HAR Title 11, Chapter 55	Water Pollution Control
2.	HAR Title 11, Chapter 58.1	Solid Waste Management Control
3.	HAR Title 11, Chapter 260	Hazardous Waste Management General Provisions
4.	HAR Title 11, Chapter 281	Underground Storage Tanks
5.	HAR Title 12, Subtitle 8	Division of Occupational Safety and Health
6.	HAR Title 12, Subtitle 8, Part 3	Construction Standards

C. State of Hawaii Department of Health (HDOH):

1. Landfill disposal requirements

1.04 GENERAL REQUIREMENTS

A. During construction, existing potentially hazardous substances or contaminated materials may be encountered. If potentially hazardous substances or contaminated materials are encountered, Contractor shall stop work in the area, secure the immediate area, and immediately notify HART. HART will investigate any potentially hazardous or contaminated materials and remove or otherwise render them safe prior to the Contractor resuming work in the area. Proceed in accordance with Special Provision 7.17.

B. Potential contaminants that may be encountered include, but are not limited to, total petroleum hydrocarbons (TPH), gasoline, diesel, and oil-range; benzene, toluene, ethylbenzene, xylenes (BTEX); metals; polynuclear aromatic hydrocarbons (PAHs); polychlorinated biphenyls (PCB; and volatile organic compounds such as perchloroethene

(PCE), trichloroethene (TCE), and vinyl chloride. Some of these substances and locations where there is a greater likelihood of impacted materials are discussed in the Hazardous Materials Technical Report (DTS 2008), in the Phase I and Phase II Environmental Site Assessment 515 Lagoon Drive (AECOM 2013), and in the Draft Hazardous Materials Survey Report (AECOM September 2013). In the Phase II Environmental Site Assessment, site soil was found to contain chromium at concentrations which trigger toxicity characteristic leaching (TCLP) testing for waste disposal purposes. The TCLP results for the soil cuttings generated during the Phase II investigation were below the TCLP D-List Maximum Contaminant Level for chromium.

C. Conduct the work of this Section in accordance with Contract requirements; direction received from HART; the accepted plans for managing contaminated materials; and applicable federal, state, and local statutes, regulations, and standards including HAR Title 11, Chapter 58.1, HAR Title 11, Chapter 260, HAR Title 12, Subtitle 8, and HAR Title 12, Subtitle 8, Part 3.

PART 2 – PRODUCTS

Not used.

PART 3 – EXECUTION

3.01 CONTRACTOR'S ASSISTANCE

A. Assist HART while performing general excavation and site remediation activities. This includes providing access for HART to document site activities and collect soil and water samples. Such assistance may also include operating a backhoe at the direction of HART or an authorized representative. Be aware and anticipate that a reasonable time will elapse between collecting confirmation samples and completing chemical laboratory analyses, and secure and maintain excavation areas during that time. Such assistance may also include attendance at regular project meetings.

B. Assist HART while performing the duties specified under the General Conditions. Such assistance includes providing access to sampling sites. Monitoring may be required under applicable permits.

C. Provide access for City representatives to conduct their own testing and monitoring at their sole discretion to satisfy HART regarding compliance with regulatory or permit requirements. Inspection, monitoring, and testing by HART does not relieve the Contractor of responsibility for compliance.

3.02 EXISTING STRUCTURES AND UTILITIES

A. Take necessary precautions to avoid damage to existing structures, their appurtenances, monitoring wells, or utilities that may be affected by work activities. Coordinate with HART, property owners, and other relevant entities to locate underground utilities prior to beginning construction. Utilities encountered that were not previously shown or otherwise located shall not be disturbed without approval from the property owner or HART.

B. Repair damage to existing site features to be protected at no additional cost to HART.

C. At least one fuel-containing UST was confirmed to have been present at the site, and closure was not documented. If this or any UST is encountered during general excavation and site remediation activities, Contractor shall stop work in the area, secure the immediate area, and immediately notify HART. HART will investigate and remove or otherwise render potentially hazardous substances or contaminated materials safe prior to the Contractor resuming work in the area. Proceed in accordance with Special Provision 7.17.

3.03 CONTAMINATED MATERIALS REMOVAL

A. Except contaminated material generated or released by the Contractor, HART will perform any required contaminated materials removal.

B. Divert surface water to prevent entry into any contaminated areas. Limit dewatering to that necessary.

3.04 SPILLS

A. In the event of a Contractor spill or release of a hazardous substance, as defined in the General Conditions requirements, notify HART immediately. If the spill exceeds the regulatory reporting threshold, follow all relevant laws, rules, and regulations for immediate reporting and containment. Take immediate containment actions to minimize the effect of spills or leaks. Perform cleanup in accordance with applicable federal, state, and local regulations. As directed by HART, perform additional sampling and testing to verify spills have been cleaned up. Perform cleanup and testing of spills resulting from the negligent actions of the Contractor at no additional cost to HART.

END OF SECTION

SECTION 02 82 33

REMOVAL AND DISPOSAL OF ASBESTOS-CONTAINING MATERIALS

PART 1 – GENERAL

1.01 SUMMARY

A. Description: This Section describes asbestos-containing materials (ACM) detected on and in structures scheduled for demolition. It is the Contractor's responsibility to ensure that the existing conditions are understood, and provide appropriate worker safety controls.

B. HART will perform removal of all ACM and certify clearance prior to the Contractor beginning work on the property.

C. Should suspect ACM be found, Contractor shall stop work in the area, secure the immediate area, and immediately notify HART. HART will investigate any suspect ACM, and remove any ACM prior to the Contractor resuming work in the area.

D. Section Includes:

1. Identification of existing conditions
2. Suspect ACM

1.02 REFERENCES

A. American National Standards Institute (ANSI):

1. ANSI Z41.1 — Safety Toe Footwear
2. ANSI Z87.1 — Eye and Face Protection
3. ANSI Z89.1 — Safety Requirements for Industrial Head Protection

B. ASTM International (ASTM):

1. ASTM D2898 — Standard Practice for Accelerated Weathering of Fire-Retardant-Treated Wood for Fire Testing
2. ASTM D3201 — Standard Test Method for Hygroscopic Properties of Fire-Retardant Wood and Wood-Based Products

C. Related Reference Studies

1. Draft Hazardous Materials Survey Report, 515 Lagoon Drive, Honolulu, O‘ahu, Hawai‘i, (AECOM September 2013)

1.03 REGULATORY REQUIREMENTS

A. Code of Federal Regulations (CFR):

1. 29 CFR 1910.58 — Asbestos, Tremolite, Anthophyllite and Actinolite
2. 29 CFR 1910.134 — Respiratory Protection

3. 29 CFR 1910.1200 Hazard Communication

4. 29 CFR 1910 Safety Standards for Fall Protection and 1926 in the Construction Industry

5. 29CFR 1926-1101 Asbestos, Construction Industry, Occupational Safety and Health Administration (OSHA), U.S. Department of Labor

6. 34 CFR 231 Appendix C, Procedures for Containing and Removing Building Materials Containing Asbestos, U.S. Environmental Protection Agency (EPA)

7. 40 CFR 61 National Emission Standards for Hazardous Air Pollutants, Subpart M – National Emission Standard for Asbestos

8. 40 CFR 763 Asbestos-Containing Materials in Schools (rules implementing AHERA, the Asbestos Hazard in Educational Buildings Reduction Act)

9. 42 CFR 84 Respiratory Protective Devices

B. Environmental Protection Agency (EPA):

1. EPA 560/5-83-002 Guidance for Controlling Friable Asbestos-Containing Materials in Buildings

2. EPA 560/5-85-024 Guidance for Controlling Asbestos-Containing Materials in Buildings

C. Hawaii Administrative Rules (HAR):

1. HAR Title 11, Chapter 58.1 Solid Waste Management Control

2. HAR Title 12, Subtitle 8 Division of Occupational Safety and Health (Chapter 145.1, Asbestos)

3. HAR Title 11, Chapter 501 Asbestos Requirements

1.04 DEFINITIONS

A. Asbestos-Containing Material (ACM): Asbestos or material containing asbestos in excess of 1 percent by weight.

B. Asbestos: fibrous mineral that includes chrysotile, amosite, crocidolite, tremolite, anthophyllite, and actinolite.

C. Asbestos-Containing Waste: Asbestos-containing or contaminated materials or objects requiring disposal.

D. Asbestos Fibers: Refers to asbestos fibers with an aspect ratio of 3:1 and longer than 5 micrometers.

E. Hazardous Air Contaminant: Air contaminant considered by regulatory agencies to cause or contribute to an identifiable and significant increase in mortality or to an increase in serious irreversible or incapacitating reversible illness, and for which no ambient air standard exists.

F. Industry Standards: Applicable construction industry standards have the same force and effect on performance of the Work as if copied directly into the Contract or bound and published therewith. Insofar as different statutes, regulations, standards, and these specifications may contain overlapping or conflicting requirements, the more stringent requirement shall apply. Comply with standards in effect as of date of Contract.

G. Removal: All procedures necessary to strip all ACM from designated areas, and handle, transport, and dispose of these materials in a permitted facility.

1.05 GENERAL REQUIREMENTS

A. HART will perform removal of all identified ACM on each property prior to the Contractor beginning work on the property.

B. If suspect ACM is identified, Contractor shall stop work in the area, secure the immediate area, and immediately notify HART. HART will investigate any suspect ACM, and remove any ACM prior to the Contractor resuming work in the area. Proceed in accordance with Special Provision 7.17.

PART 2 – PRODUCTS

Not Used.

PART 3 – EXECUTION

3.01 GENERAL

A. The execution of all work shall conform to all federal, state, and local legal requirements, including those listed by reference in Article 1.04 herein.

3.02 SUSPECT ACM

A. If suspect ACM is discovered during demolition activities, stop work in the area and immediately notify HART. Cordon off area to prevent entry and disturbance. Proceed in accordance with Special Provision 7.17.

END OF SECTION

This page intentionally left blank.

SECTION 02 83 33

REMOVAL AND DISPOSAL OF MATERIAL CONTAINING LEAD

PART 1 – GENERAL

1.01 SUMMARY

A. Description: This Section describes material containing lead detected on and in structures designated for demolition as part of the Contract. It is the Contractor's responsibility to ensure that existing conditions are understood, provide appropriate worker safety controls, and to ensure that the Work is performed in accordance with applicable federal, state, and local regulations.

B. HART will perform removal of all cracked, flaking, or peeling paint with lead prior to the Contractor beginning work on the property.

C. If cracked, flaking, or peeling paint with lead is encountered, Contractor shall stop work in the area, secure the immediate area, and immediately notify HART. HART will investigate any suspect cracked, flaking, or peeling paint with lead, and remove any cracked, flaking, or peeling paint with lead prior to the Contractor resuming work in the area.

D. Section Includes:

1. Work Area Preparation
2. Work Procedures
3. Site Quality Control and Monitoring
4. Cleanup, Testing, and Disposal

1.02 REFERENCES

A. ASTM International (ASTM)

1.03 REGULATORY REQUIREMENTS

A. Code of Federal Regulations (CFR):

1.	29 CFR 1910	Occupational Safety and Health Standards
2.	29 CFR 1926	OSHA Construction Standards
3.	40 CFR 260	Hazardous Waste Management Systems: General
4.	40 CFR 261	Identification and Listing of Hazardous Waste
5.	40 CFR 262	Standards Applicable to Generators of Hazardous Waste
6.	40 CFR 263	Standards Applicable to Transporters of Hazardous Waste
7.	40 CFR 264	Standards for Owners and Operators of Hazardous Waste Treatment, Storage, and Disposal Facilities

8. 40 CFR 265 Interim Status Standards for Owners and Operators of Hazardous Waste Treatment, Storage, and Disposal Facilities

9. 40 CFR 268 Land Disposal Restrictions

B. Local Health Departments, Landfill and Disposal Requirements:

1. National Institute for Occupational Safety and Health/Occupational Safety and Health Administration (NIOSH/OSHA) Booklet 3142, Lead in Construction

2. State of Hawaii Department of Health Lead-Based Paint Program – Hawaii Administrative Rules (HAR) Title 11 Chapter 41, Lead-Based Paint Activities

A. Related Reference Studies

1. Draft Hazardous Materials Survey Report, 515 Lagoon Drive, Honolulu, O‘ahu, Hawai‘i, (AECOM September 2013)

1.04 DEFINITIONS

A. Action Level: Employee exposure, without regard to use of respirators, to an airborne concentration of lead of 30 micrograms per cubic meter of air averaged over an 8-hour period. As used in this Section, “30 micrograms per cubic meter of air” refers to the action level.

B. Area Monitoring: Sampling lead concentrations within the lead control area and inside physical boundaries that are representative of airborne lead concentrations that may reach the breathing zone of personnel potentially exposed to lead.

C. Breathing Zone: An area within a hemisphere forward of the shoulders, with a radius of 6 to 9 inches, with its center at the employee’s nose or mouth.

D. Certified Industrial Hygienist: A trained specialist with at least 5 years experience in hazardous material processing and working knowledge of the selection and use of personal protection equipment, air monitoring, regulation, and other health and safety issues.

E. Eight-Hour Time-Weighted Average: Airborne concentration of lead to which an employee is exposed, averaged over an 8-hour workday.

F. High-Efficiency Particulate Arrestor (HEPA) Filter: High-efficiency particulate air filter capable of removing 99.97 percent of particles larger than 0.3 micron.

G. Lead: Metallic lead, inorganic lead compounds, and organic lead soaps. Excluded from this definition are other organic lead compounds.

H. Lead-Based Paint: Paint or other surface coating that contains lead in excess of 1.0 milligram per centimeter squared or 0.5 percent by weight.

I. Lead-Based Paint Hazard: Any condition that causes exposure to lead from lead-contaminated dust, lead-contaminated soil, and lead-based paint that is deteriorated or present in accessible surfaces, friction surfaces, or impact surfaces that would result in adverse human health effects.

J. Lead-Containing Paint: Lead-based paint or other similar surface coating containing lead or lead compound in excess of 0.06 percent by weight of the paint's total nonvolatile content.

K. Lead Permissible Exposure Limit: The permissible exposure to lead during an 8-hour shift: 50 micrograms per cubic meter of air as an 8-hour time-weighted average.

L. Personal Monitoring: Sampling of lead concentrations within an employee's breathing zone to determine the 8-hour time-weighted average concentration, in accordance with HAR Title 11 Chapter 41, "Lead-Based Paint Activities." Samples shall be representative of the employee's work tasks.

M. Removal: All procedures necessary to strip all cracked, loose, or flaking paint with lead from designated areas, and handle, transport, and dispose of these materials in a permitted facility.

N. Waste Manifest: A form used by haulers of hazardous waste that lists the type and quantity of waste; the generator it originated from; the transporter that shipped it; and the treatment, storage, or disposal facility to which it is being shipped.

1.05 GENERAL REQUIREMENTS

A. Lead has been confirmed to be present in a variety of different building materials on the work site, as indicated in the General Conditions and the Draft Hazardous Materials Survey Report (the "Hazmat Report") (AECOM September 2013). Demolition work shall include handling lead-containing materials in accordance with current state and federal regulations, including but not limited to 29 CFR 1926.62. Segregate suspected and known lead-coated or lead-containing components as necessary for compliance with lead regulations.

B. HART will perform removal of all cracked, flaking, or peeling paint with lead prior to the Contractor beginning work on the property.

C. Contractor shall collect and analyze representative samples of construction debris suspected to contain lead for toxicity characteristic leaching procedure (TCLP) analysis as required by the Contractor's disposal facility.

D. Conduct activities to ensure that paint dust generation is minimized. Evaluate whether or not workers are exposed to concentrations of lead in air in excess of the action level of 0.03 milligram per cubic meter (mg/m3). If the action level is exceeded, requirements for training, medical monitoring, and air sampling is triggered. If the permissible exposure limit of 0.05 mg/m3 is exceeded, more requirements must be met, including use of upgrading of respiratory protection equipment.

E. The Work includes measures necessary to adequately control dust during activities where lead-containing materials are disturbed and protect workers from lead exposures during the general demolition process and surface preparation activities.

F. Proper packaging and disposal of lead-containing items shall be included in the Work.

G. Remove and dispose of sanding dust, paint chips, disposable protective equipment, cleaning rags, wash water, and other materials contaminated from these painted surfaces as hazardous material, unless the material passes a TCLP test.

H. Assume full responsibility and liability for compliance with federal, state, and local regulations pertaining to work practices; hauling; disposal; and protection of workers, visitors to the work site, surrounding areas and features, and building occupants in areas adjacent to work areas.

1.06 SUBMITTALS

A. General: Refer to Section 7.7 – Submittal Procedures, and Section 7.8 – Shop Drawings, Product Data, and Samples, for submittal requirements and procedures.

B. At least 1 week prior to the pre-construction meeting, submit a Lead Management Plan presenting the methods to be used in compliance with Labor and Industry requirements. The Lead Management Plan may be submitted in conjunction with the Hazard Communication Site Health and Safety Plan. Work may not proceed until the complete submittal package has been reviewed and accepted by HART. As a minimum, the Lead Management Plan shall include the following components:

1. Exposure Monitoring Plan, including the person responsible for the Air Monitoring Program
2. Respiratory Protection Program
3. Personal protective equipment
4. Personal hygiene practices, including wash station
5. Administrative controls
6. Emergency Plan
7. Housekeeping practices
8. Engineering controls/equipment
9. Medical surveillance
10. Heat and/or cold stress monitoring and management
11. Employee training and medical surveillance certificates
12. Signage
13. Laboratory qualification information
14. Plans for disposing of lead-containing items, coatings, and debris
15. Plans for recycling of lead items
16. Decontamination of equipment and areas
17. Record keeping
18. Disposal facility information and requirements
19. Respirator fit test records

20. Job Hazard Analysis and Hazard Communication (Addendum to the Hazard Communication Site Health and Safety Plan; including any Material Safety Data Sheets)

21. Schedule of Activities

C. After completion of the Work, submit documentation of employee personnel air monitoring results relative to the OSHA respiratory protection level compliance. Include copies of air monitoring sample chains-of-custody and analysis reports.

D. Provide record of lead control activities, including disposition of each type of lead-containing item removed from the site, Contract changes clearly indicated, photographs of the Work, supervisor's daily field reports, and similar final record documentation.

E. Submit copies of waste profiles, transportation, signed disposal manifests from the landfill, and certificates of disposal from the landfill. Submit documentation from the recycling facility, acknowledging receipt of the sampling data pertaining to the materials received and confirming the facility's acceptance of the materials as lead-containing.

F. Submit workers' post-Contract medical surveillance results.

G. The Lead Management Plan shall include detailed air and lead material sampling methodologies to be used for HART's review and approval. Delays and associated costs resulting from revising an inadequate Lead Management Plan shall be borne by the Contractor.

1.07 QUALITY ASSURANCE

A. General: Refer to Section 7.10 – Quality Assurance, for quality assurance requirements and procedures.

B. Qualifications: Workers shall have at least 1 year of experience in the task they are to perform. The competent person shall have a minimum of 3 years of experience in lead management practices.

C. Certification:

1. Personnel working within the control areas shall have a minimum of 2 hours lead awareness training, or more as determined by the Contractor's competent person.

2. The Work shall be supervised by a competent person. The competent person shall have a minimum of 8 hours training in lead management.

3. Personnel working within the control area shall be under medical surveillance in accordance to the regulations.

4. Independent, third party testing laboratory, certified by EPA for lead related testing.

5. Name and licenses of proposed destination landfill or remediation facility where lead-containing materials will be sent. Use of the proposed facility is subject to City acceptance for compliance with federal and state regulatory requirements.

D. Meetings: The Contractor may be asked to attend regularly scheduled meetings to discuss issues related to lead-containing material.

1.08 TEMPORARY SERVICES

A. Supply equipment, material, supervision, and labor necessary to accomplish the lead-related work. Provide utilities needed to perform the Work. Existing utilities may be used if of adequate capacity. Power and water distribution systems in existing buildings may not be suitable for the Contractor's use. Work the Contractor finds necessary for power and water supply shall be at the Contractor's expense.

PART 2 – PRODUCTS

2.01 PROTECTIVE CLOTHING, EQUIPMENT, AND SUPPLIES

A. Equipment, including protective clothing and respirators used in the execution of the Contract and provided to visitors to the site, shall comply with appropriate ASTM standards and applicable federal, state, and local regulations. Respirators, if required, shall conform to the OSHA requirements in 29 CFR 1910.134.

PART 3 – EXECUTION

3.01 WORK AREA PREPARATION

A. Establish a control area that includes a perimeter sufficient to perform the Work around each building or area that contains lead or lead-coated materials. The control area shall also consist of the pathway for transport of lead-containing material to a stockpile or storage area, if the debris is not immediately transported from the site. As required, provide and display caution signs in clearly visible areas, at entrances indicating that hazardous material work is being conducted and that unauthorized persons shall not enter.

B. Prepare storm drains, floor and area drains, and drainage routes using the methods described in the approved work plan to prevent contaminated debris runoff.

C. Prepare the decontamination unit for use at entrances and exits from the work area as described in the Lead Management Plan.

D. Prepare the lead waste staging area as described in the Lead Management Plan.

E. Restrict access to work sites by maintaining a daily log of personnel entering work areas, including workers and other authorized personnel and their start/stop times.

F. Establish and post written emergency procedures within each work area, including emergency contact names and contact phone numbers, plans for medical emergencies and temporary loss of electrical power or water, and procedures for an emergency. Be responsible for establishing and posting contingency procedures to workers on site.

G. Conduct a health and safety briefing prior to the start of the Work and weekly to discuss the Health and Safety Plan, hazardous materials, hazardous work, and other related items according to the specified Health and Safety Plan. Perform more frequent briefings as required by work activities or changes in the Work.

3.02 WORK PROCEDURES

A. Perform removal of lead-containing items in accordance with the accepted Lead Management Plan. Use procedures and equipment required to limit occupational and

environmental exposure to lead when lead-containing paint is impacted or building components are demolished. The procedures employed by the Contractor shall not create the potential for contaminating surrounding areas or materials with lead-containing coatings or dust. Keep dust generation to a minimum. Dry-scraping, dry-sanding, or dry-grinding on lead-containing coatings or lead-contaminated surfaces will not be permitted without a full enclosure equipped with negative air machines.

B. Coordinate the work of trades to ensure that the Work is performed in accordance with applicable regulations and control limits are maintained inside and outside the control area.

C. Access to work areas shall be through decontamination areas. Only the Contractor, subcontractors, authorized personnel, and project consultants shall have access to the work area.

D. Prevent dust generation to the maximum extent practicable. The use of water shall be restricted to the smallest quantity necessary to minimize dust and avoid the potential of contaminant migration through runoff or ponding. In no case shall liquids generated during removal come into contact with uncontaminated soils, drains, surfaces, or conduits that may constitute a release to the environment.

E. Perform removal in areas of lead-containing paints in accordance with the approved Health and Safety Plan. Use procedures and equipment required to limit occupational and environmental exposure to lead when lead-containing paint is impacted or building components are removed. Procedures employed by the Contractor shall not create the potential for contaminating surrounding areas or materials with lead-containing coatings or dust.

F. Handle, store, and dispose of lead-coated debris in accordance with applicable federal, state, and local requirements.

G. Personnel and equipment decontamination shall occur whenever people or equipment leave the work site, as described in the Lead Management Plan. Package, store, label, and dispose of decontamination waste according to applicable requirements, at the cost of the Contractor. Store and dispose of contaminated equipment, tools, or materials that cannot be decontaminated in accordance with federal, state, and local regulations.

H. Inadequate health, safety, or environmental precautions on the part of the Contractor or the belief that the Contractor's personnel, the general public, or the environment are or may be exposed to an immediate hazard may be cause for HART to suspend the Contractor's site work and ask the Contractor's personnel to evacuate the hazard area. The Contractor shall not be compensated for such delays. The Contractor is responsible for costs identified by HART as a consequence of the Contractor's actions.

3.03 SITE QUALITY CONTROL AND MONITORING

A. While performing the Work, the Contractor may be subject to a site inspection by the owner or government agencies or officials. If found to be in violation of any pertinent regulations, cease work immediately until the violation is resolved. The standby time required to resolve the violation shall be at the Contractor's expense. For inspection of the control area, make available to the inspectors complete sets of equipment (including but not limited to respirators and disposable clothing) that may be required for entry to the control area. Such requests will only be made during working hours.

B. Air monitoring, testing, and reporting shall be performed by a Certified Industrial Hygienist, an Industrial Hygiene Technician under the direction of the Certified Industrial Hygienist, or the Site Safety and Health Officer.

C. Submit results of air monitoring samples within 24 hours after air samples are taken. Notify HART immediately of exposure to lead at or in excess of the action level of 30 micrograms per cubic meter of air outside the lead control area.

D. The Certified Industrial Hygienist shall be responsible for regularly reviewing analytical sample results and proposing all corrective action needed.

E. If the area air monitoring results are above the action level of 30 micrograms, HART shall have the option of stopping work until the work procedures and lead hazard controls are revised to HART's satisfaction.

3.04 CLEANUP, TESTING, AND DISPOSAL

A. Maintain surfaces of the lead control area as free of accumulations of paint chips and dust as practicable. Restrict the spread of dust and debris and keep waste from being distributed over the work area. Do not use compressed air to clean up the area. At the end of each shift, clean the area of visible lead paint contamination by vacuuming with a HEPA filtered vacuum cleaner and wet-mopping the area.

B. Collect representative samples of the building demolition debris for TCLP analysis, in conformance with disposal facility requirements. Test lead-containing paint residue.

C. Collect lead-containing waste, scrap, debris, bags, containers, equipment, and lead-contaminated clothing that may produce airborne concentrations of lead particles. Label the containers in accordance with 29 CFR 1910.1025.

D. Handle, store, transport, and dispose lead or lead-contaminated waste in accordance with 40 CFR 260, 40 CFR 261, 40 CFR 262, 40 CFR 263, 40 CFR 264, 40 CFR 265, and any other relevant regulations. Comply with land disposal restriction notification requirements as required by 40 CFR 268. The option of recycling construction components will be allowed if in accordance with applicable regulations and these Specifications.

E. HART will provide a Generator EPA Identification Number for manifesting hazardous waste. Manifesting of hazardous waste shall conform to EPA, USDOT, and all other applicable federal, state, and local regulations. For disposal of all hazardous waste (with the exception of wastes resulting from the release of hazardous or contaminated substances negligently disturbed, removed, or handled by the Contractor, its employees, agents, officers, or subcontractors, or any other persons for whom the Contractor may be contractually or legally responsible), the Generator's Certification portion of the Uniform Hazardous Waste Manifest shall be signed only by an approved Hazardous Materials Coordinator or by an individual delegated with such authority by HART.

F. Each transporter and disposal facility shall have an EPA Identification Number. Submit the name, address, and EPA Identification Number of the transporter and disposal site to HART for review and acceptance prior to disposal of hazardous waste.

G. Disposal Documentation: Submit written evidence that the hazardous waste treatment, storage, or disposal facility or the recycling facility is approved for lead disposal or recycling by the EPA and state or local regulatory agencies. Submit one copy of the

completed manifest, signed and dated by the initial transporter in accordance with 40 CFR 262.

END OF SECTION

This page intentionally left blank.

SECTION 02 84 33

REMOVAL AND DISPOSAL OF POLYCHLORINATED BIPHENYLS

PART 1 – GENERAL

1.01 SUMMARY

A. Description: This Section identifies suspected polychlorinated biphenyls (PCB)-containing materials detected on and in structures designated for demolition. It is the Contractor's responsibility to ensure that the existing conditions are understood, and provide appropriate worker safety controls.

B. HART will perform removal of all PCBs and certify clearance prior to the Contractor beginning work on the property.

C. Should suspect PCBs be found, Contractor shall stop work in the area, secure the immediate area, and immediately notify HART. HART will investigate any suspect PCBs, and remove any PCBs prior to the Contractor resuming work in the area.

D. Section Includes:

1. Identification of existing conditions

1.02 REFERENCES

A. Department of Transportation Services (DTS):

1. DTS 2008 — Hazardous Materials Technical Report, Honolulu High-Capacity Transit Corridor Project, dated August 15, 2008

B. Related Reference Studies

1. AECOM May 2013 — Phase I Environmental Site Assessment 515 Lagoon Drive – May 2013
2. AECOM September 2013 — Draft Hazardous Materials Survey Report, 515 Lagoon Drive, Honolulu, O‘ahu, Hawai‘i, ()

1.03 REGULATORY REQUIREMENTS

A. Code of Federal Regulations (CFR):

1. 29 CFR 1926 — OSHA Construction Standards
2. 40 CFR 172 — Experimental Use Permits
3. 40 CFR 260 — Hazardous Waste Management Systems: General
4. 40 CFR 261 — Identification and Listing of Hazardous Waste
5. 40 CFR 262 — Standards Applicable to Generators of Hazardous Waste
6. 40 CFR 263 — Standards Applicable to Transporters of Hazardous Waste

7. 40 CFR 268 Land Disposal Restrictions
8. 29 CFR 1910 Occupational Safety and Health Standards
9. 40 CFR 761 PCBs Manufacturing, Processing, Distribution in Commerce and Amendments

B. Hawaii Administrative Rules (HAR):

1. HAR Title 11, Chapter 58.1 Solid Waste Management Control
2. HAR Title 12, Subtitle 8 Division of Occupational Safety and Health
3. HAR Title 12, Subtitle 8, Part 3 Construction Standards

C. State of Hawaii Department of Health (HDOH):

1. Landfill disposal requirements

1.04 DEFINITIONS

A. PCB: Polychlorinated biphenyls.

B. PCB Article: Any manufactured article, other than a PCB container, that contains PCBs and whose surface(s) has been in direct contact with PCBs. PCB articles include capacitors, transformers, electric motors, pumps, pipes, and any other manufactured item.

C. PCB Article Container: Any package, can, bottle, bag, drum, tank, or other device that contains PCB articles or PCB equipment and whose surface(s) has not been in direct contact with PCBs.

D. PCB Container: Any package, can, bottle, bag, drum, tank, or other device that contains PCBs or PCB articles and whose surface(s) has been in direct contact with PCBs.

E. PCB Equipment: Any manufactured item, other than a PCB container or a PCB article container, which contains a PCB article, including electronic equipment and fluorescent light ballasts and fixtures.

F. Toxic Substances Control Act (TSCA) – Main federal statute concerned with regulation of the manufacture, distribution, use, and disposal of PCB materials.

1.05 GENERAL REQUIREMENTS

A. HART will perform removal of all PCB-containing materials on each property prior to the Contractor beginning work on the property.

B. If suspect PCB-containing materials are identified, Contractor shall stop work in the area, secure the immediate area, and immediately notify HART. HART will investigate any suspect PCB-containing materials, and remove any PCB-containing materials prior to the Contractor resuming work in the area. Proceed in accordance with Special Provision 7.17.

PART 2 – PRODUCTS

Not used.

PART 3 – EXECUTION

3.01 GENERAL

A. The execution of all work shall conform to all federal, state, and local legal requirements, including those listed by reference in Article 1.04 herein.

3.02 SUSPECT PCB-CONTAINING MATERIALS

A. If suspect PCB-containing materials are discovered during demolition activities, notify HART immediately and stop work in the area. Cordon off area to prevent contamination of clean areas. Proceed in accordance with Special Provisions SP7.17.

END OF SECTION

This page intentionally left blank.

SECTION 03 05 15

PORTLAND CEMENT CONCRETE

PART 1 – GENERAL

1.01 SUMMARY

A. Description: This Section includes portland cement concrete composed of portland cement, fine aggregate, coarse aggregate, and water. The Work includes adding admixtures for the purpose of entraining air, retarding or accelerating set, tinting, and other purposes as required or permitted.

B. Section Includes:

1. Batching, Mixing, and Transporting
2. Field Quality Control

C. Related Sections:

1. Section 03 35 00 – Concrete Finishing

1.02 REFERENCES

A. American Concrete Institute (ACI):

1.	ACI 116R	Cement and Concrete Terminology
2.	ACI 121R	Guide for Concrete Construction Quality Systems in Conformance with ISO 9001
3.	ACI 211.1	Standard Practice for Selecting Proportions for Normal, Heavyweight, and Mass Concrete
4.	ACI 211.2R	Standard Practice for Selecting Proportions for Structural Lightweight Concrete
5.	ACI 213R	Guide for Structural Lightweight-Aggregate Concrete
6.	ACI 301	Specifications for Structural Concrete
7.	ACI 304R	Guide for Measuring, Mixing, Transporting, and Placing Concrete
8.	ACI 304.2R	Placing Concrete by Pumping Methods
9.	ACI 305R	Hot Weather Concreting
10.	ACI 318	Building Code Requirements for Structural Concrete

B. ASTM International (ASTM):

1.	ASTM C31	Standard Practice for Making and Curing Concrete Test Specimens in the Field
2.	ASTM C33	Standard Specification for Concrete Aggregates

3. ASTM C39 — Standard Test Method for Compressive Strength of Cylindrical Concrete Specimens
4. ASTM C42 — Standard Test Method for Obtaining and Testing Drilled Cores and Sawed Beams of Concrete
5. ASTM C94 — Standard Specification for Ready-Mixed Concrete
6. ASTM C114 — Standard Test Methods for Chemical Analysis of Hydraulic Cement
7. ASTM C136 — Standard Test Method for Sieve Analysis of Fine and Coarse Aggregates
8. ASTM C143 — Standard Test Method for Slump of Hydraulic-Cement Concrete
9. ASTM C150 — Standard Specification for Portland Cement
10. ASTM C172 — Standard Practice for Sampling Freshly Mixed Concrete
11. ASTM C231 — Standard Test Method for Air Content of Freshly Mixed Concrete by the Pressure Method
12. ASTM C330 — Standard Specification for Lightweight Aggregates for Structural Concrete
13. ASTM E329 — Standard Specification for Agencies Engaged in Construction Inspection and/or Testing

C. State of Hawaii Department of Transportation Standard Specifications (HSS):

1. HSS Section 601 — Structural Concrete
2. HSS Section 701 — Hydraulic Cement
3. HSS Section 703 — Aggregates
4. HSS Section 711 — Concrete Curing Materials and Admixtures
5. HSS Section 712 — Miscellaneous

1.03 SUBMITTALS

A. General: Refer to Section 7.7 – Submittal Procedures, and Section 7.8 – Shop Drawings, Product Data, and Samples, for submittal requirements and procedures.

B. Concrete Mix Designs: Submit mix designs as specified in Article 2.02 herein. Include laboratory test reports of trial strength tests.

C. Product Data: Submit manufacturer's product data for proposed concrete admixtures.

D. Samples: Furnish and deliver samples of cement and aggregates for testing and analysis. This requirement may be waived if certificates of compliance are furnished, as specified in Articles 1.04C and 1.05A herein.

E. Affidavits/Certificates: Submit evidence of compliance with specification requirements for cement, aggregate, and admixtures. Mill tests and manufacturers' certification of

compliance with ASTM International (ASTM) specifications will be accepted in lieu of testing of cement and analysis of aggregates.

F. Batch Tickets: Submit a delivery ticket in accordance with HSS Subsection 601.03(E) – Transporting Mixed Concrete.

1.04 QUALITY ASSURANCE

A. General: Refer to General Conditions Section 7, Section 7.10 – Quality Assurance, for quality assurance requirements and procedures.

B. Select a qualified concrete supplier capable of meeting work requirements and the requirements of these Specifications.

C. The concrete supplier shall be certified by the National Ready Mix Concrete Association and shall hold a valid certificate of conformance for concrete production facilities.

D. Provide a Quality Assurance Program to ensure control and uniformity of materials, conformance with accepted mix designs, and prompt and proper delivery of concrete to the job site in accordance with the applicable requirements and recommendations of ACI 121R and ASTM C94.

1.05 TESTS AND ANALYSES OF MATERIALS

A. Tests and Sample Analyses: Perform testing of cement, admixture, and analysis of aggregates. Mill tests and supplier's certification of compliance with ASTM specifications will be accepted in lieu of testing of cement and analysis of aggregates. Tests and services shall consist of the following:

1. Testing of portland cement in accordance with ASTM C150 and ASTM C114.

2. Analysis of aggregates in accordance with ASTM C33, and sieve analysis of fine and coarse aggregates in accordance with ASTM C136.

3. Conform to HSS Subsection 711.03(B) – Admixture Acceptance.

B. Samples: Furnish and deliver identified samples of materials required for tests and analysis in the amounts required by HART without charge. Deliver samples of cement and aggregates at least 30 days prior to use.

1.06 CLASSES OF CONCRETE

A. Classes of concrete are designated by a numerical symbol indicating the minimum 28-day compressive strength in pounds per square inch (psi), as determined by ASTM C39.

B. Each class of concrete may consist of one or more mixes determined by the maximum size of aggregate, cement factor, and types of admixtures or special aggregates used.

C. Each mix within a class of concrete shall be considered a specific type, requiring acceptance of the mix design.

D. The various classes of concrete are listed in Table 03 05 15-A at the end of this Section and in Table 601.03-1 of HSS Section 601 – Structural Concrete.

1.07 WEATHER CONDITIONS

A. Batching, mixing, and delivering concrete in hot weather shall conform to the applicable requirements of ACI 305R.

B. Maximum ambient temperature for placing concrete shall be 90 degrees Fahrenheit. If the ambient temperature exceeds 90 degrees Fahrenheit, the mix shall be cooled by an appropriate method such as icing the mixing water. Uniform concrete temperature of succeeding batches placed shall be maintained. The maximum allowable fresh concrete temperature shall be limited to 95 degrees Fahrenheit. Higher allowable concrete temperature would require written approval from HART.

PART 2 – PRODUCTS

2.01 MATERIALS

A. Portland Cement: Conform to HSS Subsection 701.01– Portland Cement. Type III portland cement may be used where high early-strength concrete is a requirement. Refer to ACI 116R for general concrete and cement terminology.

B. Aggregates:

1. Coarse Aggregate: Conform to HSS Subsection 601.03 – Construction and HSS Subsection 703.02 – Coarse Aggregate for Portland Cement Concrete.

2. Fine Aggregate: Conform to HSS Subsection 703.01 – Fine Aggregate for Concrete.

3. Lightweight Aggregates: ASTM C330 and ACI 213R, uniformly graded to the maximum size indicated or specified. When not specified, provide 3/4-inch to No. 4 coarse aggregate combined with ASTM C33 graded fine aggregate.

C. Admixtures: Conform to HSS Subsection 711.03(A) – Admixture Material. Shrinkage-reducing admixture shall be added to the concrete mix with a minimum dosage requirement of 128 ounces per cubic yard of concrete, to reduce drying shrinkage of concrete and mortar and the potential for subsequent cracking.

D. Water: Conform to HSS Subsection 712.01 – Water.

2.02 MIXES

A. Furnish all materials, tools, equipment, devices, appurtences, facilities, and services as required for performing the work. Design of concrete mixes, including recommended amounts of admixture and water to be used in the mixes, shall be obtained from a qualified independent testing laboratory or agency, or from a mill or ready-mix plant properly equipped to design concrete mixes. Mix design shall be performed and certified by a civil or structural engineer registered in the State of Hawaii. The laboratory, agency, mill, or ready-mix plant shall meet the applicable requirements of ASTM E329. Pay costs of obtaining the mix designs.

B. Selection of mix proportions shall conform to the applicable requirements of ACI 211.1 and ACI 211.2R. Concrete shall comply with ACI 301 and ACI 318, as applicable. Ensure that mix designs will produce concrete suited for proper placement and finishing.

C. Mix designs shall indicate brands, types, and quantities of admixtures included. If fly ash is proposed, it shall be identified as such (i.e., fly ash) and the mix design shall identify the

percentage of cement replacement and locations in the structures where such mixes are proposed for use.

D. Mix design for mass concrete shall have a percentage of fly ash replacement of cement by weight, to reduce the amount of heat generated during heat of hydration.

E. If concrete is to be placed by pumping, concrete mixes shall be designed in accordance with the applicable requirements of ACI 304R and ACI 304.2R and shall include strengths and slumps.

F. Mix designs shall indicate the location of each mix within the structure. Mix designs shall specify both coarse and fine aggregate sources.

G. Upon receipt of acceptable mix designs from the prequalified testing laboratory, agency, or concrete supplier conforming to specified requirements, submit these accepted mix designs to HART for review.

H. Concrete mixes shall contain at a minimum the number of 94-pound sacks of cement per cubic yard specified in Table 03 05 15-A, regardless of the fact that the strengths specified may be obtained with lesser amounts of cement. Exception will only be made for mass concrete to reduce the heat of hydration, as specified herein, and for concrete mixes for civil work specified to follow Table 601.03-1 of HSS 601.

PART 3 – EXECUTION

3.01 BATCHING, MIXING, AND TRANSPORTING

A. Batching portland cement concrete shall be in accordance with the requirements of HSS Subsection 601.03(C) – Batching.

B. Mixing portland cement concrete shall be in accordance with the requirements of HSS Subsection 601.03(D) – Mixing.

C. Transporting portland cement concrete shall be in accordance with the requirements of HSS Subsection 601.03(E) – Transporting Mixed Concrete.

3.02 FIELD QUALITY CONTROL

A. Inspection, Sampling and Testing: In accordance with HSS Subsection 601.03(A) – Quality Control.

B. Methods of Sampling and Testing:

1. Sampling: Representative composite samples will be taken in accordance with ASTM C172. Each sample will be randomly obtained from a different batch of concrete.

2. Slump Tests: The Contractor's independent test laboratory shall perform slump tests of concrete during placing of concrete, as required, in accordance with ASTM C143.

3. Air Content: The Contractor's independent test laboratory shall perform air content tests of concrete during placement of concrete, as required, in accordance with ASTM C231.

4. Temperature: The Contractor's independent test laboratory shall measure the temperature of concrete during placement of concrete, as required.

5. Strength Tests:
   a. Prepare and cure compression test samples. Cylinders will be made and cured in accordance with ASTM C31. Cylinders will be tested in accordance with ASTM C39.
   b. The minimum number of test cylinders to be made for each class of concrete and for each placement will be four for each 100 cubic yards or fraction thereof. When additional sets of test cylinders are required beyond the normal 7- and 28-day tests, each set will consist of a minimum of two test cylinders.
   c. All cylinders in a set will be marked with a unique number on one end. Record this number on the record of concrete placed. The Contractor's testing laboratory shall cure all cylinders.
   d. From each set of cylinders cast, one cylinder will be tested at 7 days and two cylinders will be tested at 28 days, in accordance with ASTM C39. If the 28-day tests are satisfactory, the fourth cylinder shall be discarded.
   e. In the event that the 28-day tests are below the specified strength requirements, the laboratory shall test the fourth cylinder.

6. Tests for Concrete Uniformity: The Contractor's independent test laboratory shall perform tests for concrete uniformity in accordance with ASTM C94, Annex A1.

C. Evaluation and Acceptance of Tests:

1. Acceptance of Concrete: The strength of the concrete will be considered satisfactory if the averages of all sets of three consecutive strength test results equal or exceed the specified 28-day compressive strength, and no individual strength test result falls below the specified 28-day compressive strength by more than 300 psi.

2. Concrete Consistency: Consistency shall be within the nominal slump range specified in HSS Table 601.03-3 – Slump for Concrete.

3. Air Content: Air content shall be within the range specified in HSS Subsection 601.03(B) – Design and Designation of Concrete.

4. Temperature: Temperature shall not exceed the temperature specified in Article 1.07B herein.

5. Adjustments: The Contractor may order adjustments to mix proportions, increases in minimum cement content, additional curing of a structure, or any combination of the above when the strength test acceptance criteria specified are not being met.

6. Investigation of Low Strength Concrete for Structural Adequacy: When a concrete acceptance strength test result falls more than 500 psi below the specified minimum strength, from the specified minimum strength, and HART determines that an investigation is necessary, make an investigation into the structural adequacy of the LOT of concrete represented by that acceptance strength test result at no additional expense to HART. HART may also require the Contractor to perform additional strength testing as necessary to determine structural adequacy of the concrete.
   a. Furnish either a structural analysis performed by a structural engineer registered in the State of Hawaii to establish strength adequacy or drilled core samples as specified in Subsection 3.02 Paragraph C Subparagraph 7, to determine the in-

place strength of the LOT of concrete in question at no additional expense to HART. Obtain HART's approval before taking any core samples. When the concrete is deemed to have low strength, obtain and test the cores and report the data to HART within 14 days of the 28 day compressive strength tests. Core strength test results obtained from the structure will be accepted by both the Contractor and HART as the in-place strength of the LOT of concrete in question. The core strength test results will be final and used in lieu of the cylinder strength test results for determination of structural adequacy and any pay adjustment. HART will calculate the strength value to be the average of the compressive strengths of the three individual cores. This will be accepted as the actual measured value.

b. If core strength test results are less than 500 psi below the specified minimum strength, consider the concrete represented by the cores structurally adequate. If the core strength test results are more than 500 psi below the specified minimum strength, HART will consider the concrete represented by the cores structurally questionable. Submit a structural analysis performed by a Specialty Engineer. If the results of the structural analysis indicate adequate strength to serve its intended purpose with adequate durability, and is approved by HART, the Contractor may leave the concrete in place subject to the requirements of Subsection 3.02 Paragraph C Subparagraph 8, otherwise, remove and replace the LOT of concrete in question at no additional expense to HART.

7. Coring for Determination of Structural Adequacy: Furnish three undamaged core samples, in accordance with ASTM C42, taken from the same approximate location where the questionable concrete is represented by the low strength concrete test cylinders. Select the location of the drilled cores so that the structure is not impaired and does not sustain permanent damage after repairing the core holes. Obtain HART's approval of the core location prior to coring.

   a. Core Conditioning and Testing: The Department will test the cores in accordance with ASTM C42. HART will make the determination whether to test the cores in a dry or wet condition. If the decision is to test the cores in a wet condition, immerse the cores in water for at least 40 hours, and test the cores wet. The cores will be tested after obtaining the samples within three days for wet cores and within six days for dry cores. For cores tested no later than 42 days after the concrete was cast, HART will accept the core strengths obtained as representing the equivalent 28 day strength of the LOT of concrete in question. The strength value will be calculated as the average of the compressive strengths of the three individual cores. HART will accept this strength at its actual measured value.

   b. Core Strength Adjustments: For cores tested later than 42 days after the concrete was cast, HART will establish the equivalency between 28 day strength and strength at ages after 42 days based on test data developed by a City approved testing laboratory to relate strength at the actual test age to 28 day strength for the particular class of concrete and design mix represented by the cores. Obtain such data at no additional expense to HART.

   c. Core holes shall be filled in accordance with the requirements of Section 03 35 00 – Concrete Finishing, for repair of surface defects.

8. Calculating Pay Adjustments: HART will determine payment reductions for accepted low strength concrete and represented by either cylinder or core strength test results below the specified minimum strength, in accordance with the following:

Reduction in Pay is equal to the reduction in percentage of concrete cylinder strength (specified minimum strength minus actual strength divided by specified minimum strength).

9. Rejection of Concrete, Repair, and Replacement: HART shall have the authority to reject concrete work that does not meet specification requirements, and to require repair or replacement as necessary to complete the Work.

D. Acceptance of Structure: Acceptance of completed concrete work requires conformance with the dimensional tolerances, appearance, and strengths specified in these Specifications and in ACI 301.

Table 03 05 15-A:
Portland Cement Concrete Mixes

Classification		Minimum Cement Content
Compressive Strength (psi*)	**Maximum Aggregate Size**	**94-Pound Sacks per Cubic Yard**
Reinforced Concrete:		
2000	3/8 inch	4.5
2000	3/4 inch	4.0
2000	1-1/2 inch	4.0
2500	3/8 inch	5.0
2500	3/4 inch	4.5
2500	1-1/2 inch	4.5
3000	3/8 inch	5.5
3000	3/4 inch	5.0
3000	1-1/2 inch	5.0
3500	3/8 inch	6.0
3500	3/4 inch	5.5
3500	1-1/2 inch	5.0
4000	3/8 inch	6.5
4000	3/4 inch	6.0
4000	1-1/2 inch	5.5
4500	3/8 inch	7.0
4500	3/4 inch	6.5
4500	1-1/2 inch	6.0
5000	3/8 inch	7.0
5000	3/4 inch	6.5
5000	1-1/2 inch	6.5
Prestressed Concrete:		
5000	3/4 inch	7.0
6000	3/4 inch	7.5
8000	3/4 inch	8.0

*psi = pounds per square inch

END OF SECTION

This page intentionally left blank.

SECTION 03 11 00
CONCRETE FORMING

PART 1 – GENERAL

1.01 SUMMARY

A. Description: This Section includes specifications for designing, furnishing materials, fabricating, erecting, and removing formwork for cast-in-place concrete.

B. Section Includes:

1. Layout of Formwork
2. Formwork Construction
3. Embedded Items and Openings in Concrete
4. Form Release Material
5. Removal of Forms
6. Field Quality Control
7. Detection of Movement
8. Re-Use of Forms

C. Related Sections:

1. Section 03 11 14 – Concrete Falsework
2. Section 03 15 13 – Waterstops
3. Section 03 30 00 – Cast-In-Place Concrete
4. Section 03 35 00 – Concrete Finishing

1.02 REFERENCES

A. American Concrete Institute (ACI):

1.	ACI 117	Specifications for Tolerances for Concrete Construction and Materials and Commentary
2.	ACI 301	Specifications for Structural Concrete
3.	ACI 318	Building Code Requirements for Structural Concrete
4.	ACI 347	Guide to Formwork for Concrete

B. Federal Specifications (FS):

1.	TT-S-230	Sealing Compound: Elastomeric Type, Single Component (for Caulking, Sealing, and Glazing in Buildings and Other Structures)

2. TT-S-1543 Sealing Compound: Silicone Rubber Base (for Caulking, Sealing, and Glazing in Buildings and Other Structures)

C. State of Hawaii Department of Transportation Standard Specifications (HSS):

1. HSS Section 503 Concrete Structures

1.03 SUBMITTALS

A. General: Refer to Section 7.7 – Submittal Procedures, and Section 7.8 – Shop Drawings, Product Data, and Samples, for submittal requirements and procedures.

B. For formwork submittals involving shoring or falsework, comply with requirements specified in Section 03 11 14 – Concrete Falsework.

C. Shop Drawings: Submit drawings that indicate and include the following details and requirements:

1. Forming system and method of erection with associated details.

2. Shoring accompanied by design calculations. Include reshoring procedures. Both drawings and calculations shall be stamped and signed by a Hawaii licensed Structural Engineer. Coordinate with Section 03 11 14 – Concrete Falsework.

3. Locations of construction joints in plan and elevation views, indicating the sequence of concrete placement.

4. Locations and sizes of conduits, openings, recesses, pipes, ducts, and other attached or embedded products.

5. Beam intersections and other conditions where concrete casting by vertical drop may be restricted.

6. Method and schedule for removing forms and shoring.

7. Method for detecting formwork movement during concrete placement.

D. Product Data: Submit manufacturer's product data for manufactured products specified and identified.

E. Samples: Submit form material, 12 inches by 12 inches or larger in size, for formed concrete that will be exposed to public view in the finished Work. Such samples require HART's approval before they may be used in the Work.

1.04 QUALITY ASSURANCE

A. General: Refer to Section 7.10 – Quality Assurance, for quality assurance requirements and procedures.

B. Formwork Standards: Unless otherwise indicated, design, construct, erect, maintain, and remove forms and related structures for concrete work in accordance with applicable requirements of ACI 301, ACI 318, and ACI 347.

C. Formwork Surface Materials: Provide material and work quality that will produce clean and uniform finished surfaces within the allowable tolerances specified and conform with the following requirements:

1. Concrete Exposed to View: Provide material and work quality that will produce clean, smooth, and uniform concrete surfaces. In accordance with Section 03 35 00 – Concrete Finishing, and ACI 301.

2. Concrete Concealed from View: Provide material and work quality that will produce aligned concrete surfaces free of fins, honeycomb, and stains.

D. Special Formwork Sections: Provide openings, offsets, sinkages, keyways, recesses, moldings, rustication strips, chamfers, blocking, screeds, bulkheads, anchorages, embedded items, and other features. Select materials and provide workmanship that will ensure indicated finishes.

E. Chamfered Corners: All external corners shall be chamfered, unless otherwise indicated.

F. Removal Features: Design formwork to be readily removable without impact, shock, and damage to concrete surfaces and adjacent materials.

G. Tolerances for Formed Surfaces: For buildings and similar structures, comply with the requirements of ACI 301, as applicable. For those items of work or parts of the structure not covered by ACI 301, comply with the requirements of ACI 117, as applicable. Coordinate with the requirements specified in Section 03 30 00 – Cast-In-Place Concrete.

1.05 DELIVERY, STORAGE, AND HANDLING

A. Storage: Store form panels to prevent warpage. Protect panels from damage and contamination that could adversely affect concrete.

B. Handling: Lift form panels by methods that will protect panels from damage and distortion.

1.06 JOB CONDITIONS

A. Allow sufficient time between erection of forms and placing of concrete for the various trades to properly install concrete reinforcement, embedded items, sleeves, and blockouts.

B. Do not apply lateral or vertical superimposed loads to the structure until concrete has met requirements of HSS Subsection 503.03(E) – Loading.

PART 2 – PRODUCTS

2.01 MATERIALS

A. Lumber:

1. Boards: Use dressed side of lumber for surface in contact with the concrete, and provide boards with dressed or tongue-and-groove edges to provide tight joints to prevent mortar leakage.

2. Framing Lumber: Structural grade, dressed or rough.

B. Plywood (Plyform): Use plywood conforming to HSS Subsection 503.03(C) – Forms – Form Lumber.

C. Steel Forms: Conform to HSS Subsection 503.03(C) – Forms – Metal Forms.

D. Formliners for Exposed and Architectural Concrete: Thermally formed, pressed, or molded fiber-reinforced plastic (FRP), ABS alloy plastic, PVC alloy plastic, or similar material, manufactured to produce finished concrete of design, configuration, and surface texture indicated. Formliners shall be continuous, one piece. No horizontal joints shall be acceptable unless the applicable height exceeds the available formliner height. Provide formliners with inherent form release surface. Formliners may be manufactured for single-use or multi-use service as appropriate.

E. Leakage Control Materials: Provide materials capable of producing flush, watertight, nonabsorbent surfaces and joints and compatible with forming material and concrete ingredients. Seal form edges with gasketing material or sealant placed in the joint in such a way that neither a fin nor groove is made in the face of the cast concrete.

1. Caulking Compound: Silicone or polyurethane construction sealant conforming to FS TT-S-230 or TT-S-1543, as applicable.

2. Tapes: Form film tape of polypropylene plastic treated with waterproof adhesive, for joint conditions not exposed to public view.

F. Form Release Agent: Commercial-formulation, silicone-free form release agent, designed for use on all types of forms, which will not bond with, stain, or adversely affect concrete surfaces; impair subsequent treatment of concrete surfaces requiring bond or adhesion; or impede wetting of surfaces that will be cured with water, steam, or curing compounds.

G. Form Ties: Conform to HSS Subsection 503.03(C) – Forms – Form Ties.

H. Inserts: Cast stainless steel or welded stainless steel, Type 316 or similar 300 Series, complete with anchors to concrete and fittings such as bolts, wedges, and straps. Provide hanger inserts spaced to match grid of suspended ceiling.

I. Dovetail Anchor Slots: 22-gage or heavier galvanized steel dovetail anchor slots, for anchoring of masonry veneer with galvanized steel dovetail anchors.

J. Chamfer Strips: 3/4-inch by 3/4-inch triangular fillets milled from clear, straight-grain pine, surfaced each side, or extruded vinyl type with or without nailing flange.

K. Miscellaneous Joint Strips: Preformed strips for reveals, rustications, and similar joints fabricated of wood, metal, or plastic.

L. Waterstops: In accordance with Section 03 15 13 – Waterstops.

2.02 FABRICATION

A. Formwork – General: Fabricate forms in accordance with approved shop drawings. Maintain forms clean, smooth, and free from imperfections and distortion. Fabricate forms for architectural concrete in accordance with applicable requirements of ACI 301.

B. Form lumber: Arrange from panels conforming to HSS Subsection 503.03(C) – Forms – Form Lumber.

C. Steel Forms: Fabricate panels conforming to approved shop drawings and HSS Subsection 503.03(C) – Forms – Metal Forms. Reinforce panel surfaces in a manner that will prevent bow and deflection during concrete placement.

PART 3 – EXECUTION

3.01 LAYOUT OF FORMWORK

A. Locate and stake out all forms and establish all lines, levels, and elevations.

3.02 FORMWORK CONSTRUCTION

A. Formwork:

1. Construct formwork in accordance with HSS Subsection 503.03(C) – Forms – Construction and approved shop drawings, and in a manner that will produce finished concrete surfaces conforming to indicated design and within specified tolerances.

2. In accordance with HSS Subsection 503.03(B) – Falsework, Formwork, or Centering, limit deflection due to weight of dead and live loads to 0.4 percent of the span. Provide camber strips to compensate for deflections greater than 1/4 inch due to permanent loads and long-term deflections due to shrinkage and creep, as required.

3. Provide construction openings in forms where required for concrete pour pockets, vibrator access holes, and inspection openings to aid in proper placement and consolidation of concrete, and close up openings during placement of concrete as applicable.

B. Wall Forms: In accordance with HSS Subsection 503.03(C) – Forms – Walls.

C. Edge Forms and Screeds for Slabs: Set edge forms or bulkheads and intermediate screeds for slabs to obtain required elevations and contours in the finished slab surface. Support screeds substantially without penetrating waterproof membranes and vapor barriers.

D. Corner Treatment: Place minimum 3/4-inch by 3/4-inch chamfers in accordance with HSS Subsection 503.03(C) – Forms – Construction.

E. Construction Joints: Place construction joints in accordance with Section 03 30 00 – Cast-In-Place Concrete.

3.03 EMBEDDED ITEMS AND OPENINGS IN CONCRETE

A. Install conduit, pipe sleeves, waterstops, appliance boxes, frames for items recessed in walls, door frames, drains, metal ties, inserts, nailing strips, blocking, grounds, and other fastening devices required for anchorage or attachment of other work. Firmly secure products in position, located accurately as indicated, before beginning concrete placement.

B. Provide openings in concrete for passage of ducts, and provide clearances as indicated on approved shop drawings.

C. Where masonry walls will be tied to concrete construction in future construction, use dovetail anchor slots positioned for maximum flexibility for masonry installation.

3.04 FORM RELEASE MATERIAL

A. Clean and coat form contact surfaces with form release agent in accordance with HSS Subsection 503.03(C) – Forms – Surface Treatment, before reinforcement is placed.

3.05 REMOVAL OF FORMS

A. Remove forms by methods that will not injure, mar, gouge, or chip concrete surfaces, overstress concrete members, or distort formwork. Use air pressure or other approved methods. Do not pry against concrete. Cut off nails flush. Leave surfaces clean and unblemished.

B. Removal time of forms shall be in accordance with HSS Subsection 503.03(D) – Removal of Falsework and Forms.

C. Concrete work damaged by removal operations shall be repaired as specified in Section 03 35 00 – Concrete Finishing. Where exposed surfaces are damaged beyond acceptable repair measures, damaged concrete shall be removed and replaced with new concrete.

D. Plan reshoring operations in a manner that will ensure that areas of new construction will not be required to support their own weight. Reshoring shall be in place before shoring is removed. During reshoring, do not permit live loads on new construction. Do not locate reshoring in a manner and location that will overstress members or induce tensile stresses where reinforcing bars have not been provided.

3.06 FIELD QUALITY CONTROL

A. Before placing concrete, check lines and grades of erected formwork and positioning of embedded inserts, blockouts, and joints for correctness. Verify that embedded piping and conduit are free from obstructions. Make corrections or adjustments to ensure proper size and location of concrete members and stability of forming systems.

B. While placing concrete, provide quality control to assure that formwork and related supports have not been displaced, loss of cement paste through joints is prevented, and completed work will be within specified tolerances. In accordance with HSS Subsection 503.03(C) – Forms – Construction, undulations shall not exceed either 3/32 inch or 1/270 of the center-to-center distance between studs, joists, form stiffeners, form fasteners, or walls.

C. During form removal, verify that architectural features meet the form and texture requirements of the samples approved by HART.

3.07 DETECTION OF MOVEMENT

A. Check movement using methods such as plumb lines, tell tales, and survey equipment to detect movement of formwork during concrete placement.

3.08 RE-USE OF FORMS

A. Re-used forms shall be in accordance with HSS Subsection 503.03(C) – Forms – Reuse of Forms.

END OF SECTION

This page intentionally left blank.

SECTION 03 11 14

CONCRETE FALSEWORK

PART 1 – GENERAL

1.01 SUMMARY

A. Description: This Section includes specifications for designing and furnishing materials for fabricating, erecting, and removing safe and adequate falsework that provides the necessary rigidity, supports the loads imposed, and produces the finished structure to the lines and grades indicated. The requirements of this Section apply to all structures that require falsework such as bridges, stations, culverts, and related structures.

B. Section Includes:

1. Layout of Falsework
2. Falsework Construction
3. Removal of Falsework

C. Related Sections:

1. Section 03 11 00 – Concrete Forming
2. Section 31 62 00 – Driven Piles

1.02 REFERENCES

A. American Association of State Highway and Transportation Officials (AASHTO):

1. AASHTO GSBTW-1-I1 Guide Design Specifications for Bridge Temporary Works

B. State of Hawaii Department of Transportation Standard Specifications (HSS):

1. HSS Section 503 Concrete Structures

1.03 SUBMITTALS

A. General: Refer to Section 7.7 – Submittal Procedures, and Section 7.8 – Shop Drawings, Product Data, and Samples, for submittal requirements and procedures.

B. Falsework: In accordance with HSS Subsection 503.03(B) – Falsework, Formwork, or Centering, submit the following:

1. Falsework plans.
2. Soil bearing value.
3. Stress sheets.
4. Superstructure placing diagram and sequence.
5. Falsework removal procedure.
6. Falsework design calculations.

7. Manufacturer's certificates, or perform tests as necessary to demonstrate adequacy of devices proposed for use.

8. Show anticipated total settlements of falsework and forms. These should include falsework footing pressure and settlement, and joint take-up.

C. Temporary bracing shall be provided as necessary, to withstand all imposed loads during erection, construction, and removal of falsework whose height exceeds its clear distance to either the edge of a sidewalk or shoulder of a roadway that is open to the public. Falsework drawings shall show provisions for such temporary bracing or methods to be used to conform to this requirement during each phase of erection and removal. Wind loads shall be included in the design of such bracing or methods.

D. Forming System: Furnish form design and materials data for each forming system to be used for exposed surfaces, as specified in Section 03 11 00 – Concrete Forming.

1.04 FALSEWORK DESIGN CRITERIA

A. Design Loads: In accordance with HSS Subsection 503.03(B) – Falsework, Formwork, or Centering for the following load and loading conditions:

1. Use vertical and lateral loads as stated in HSS Subsection 503.03(B) – Falsework, Formwork, or Centering. Minimum total design vertical load for any falsework member shall not be less than 100 psf for the combined dead and live load, exclusive of any increase for impact, regardless of slab thickness. The minimum design lateral load from wind shall not be less than as stated in AASHTO Guide Design Specifications for Bridge Temporary Works.

2. Weight of concrete: Assume weight of 160 pounds per cubic foot for concrete.

3. Loads from Prestressing: Design falsework for prestressed concrete structures for additional loads caused by prestressing.

4. Over Waterways: Design falsework with special consideration to prevent reduction in support capacity due to effects of water. Use water pressure on the supports as stated in AASHTO Guide Design Specifications for Bridge Temporary Works.

5. Vehicular Impact: Falsework shall withstand vehicle impact and maintain until falsework removal.

6. Design falsework for support of superstructure required for loads that would be superimposed if entire superstructure were placed at once.

7. Design vertical falsework members supporting spans with single hinge or double hinges within the span, for twice tributary falsework requirements at a distance of 10 feet on each side of hinges, measured parallel to centerline of girder.

B. Design Stresses, Loadings, and Deflections:

1. Stresses: Conform to industry codes stated in HSS Subsection 503.03(B) – Falsework, Formwork, or Centering, as applicable.

2. Deflection: Design falsework to provide necessary rigidity and support loads without appreciable settlement or deformation. Limit maximum deflection as stated in HSS Subsection 503.03(B) – Falsework, Formwork, or Centering.

1.05 QUALITY ASSURANCE

A. General: Refer to Section 7.10 – Quality Assurance, for quality assurance requirements and procedures.

B. In accordance with HSS Subsection 503.03(B) – Falsework, Formwork, or Centering, falsework drawings and calculations shall be signed by a Structural Engineer registered in the State of Hawaii.

C. In accordance with HSS Subsection 503.03(B) – Falsework, Formwork, or Centering, do not start construction of any unit of falsework until HART has accepted the shop drawings and calculations for that unit. HART's acceptance of drawings or inspections of systems does not relieve the Contractor from responsibility for the results obtained using such drawings and calculations.

D. The falsework design will not be approved unless based on the use of loads and conditions no less severe than those described in Article 1.04A herein, and on the use of stresses and deflections no greater than those described in Article 1.04B herein. The Contractor is responsible for the proper evaluation of falsework materials and design of the falsework to safely carry the actual loads imposed.

E. In accordance with HSS Subsection 503.03(B) – Falsework, Formwork, or Centering, construct slab forms between girders with no allowance for settlement relative to the girders.

F. In accordance with HSS Subsection 503.03(B) – Falsework, Formwork, or Centering, anticipated settlements of falsework shall not exceed 1 inch.

G. Provide tell-tales attached to soffit forms, readable from the ground, at sufficient locations to determine total settlements resulting from concrete placement. In accordance with HSS Subsection 503.03(B) – Falsework, Formwork, or Centering, discontinue concrete placement when settlements deviate more than 3/8 inch from those indicated on falsework drawings, until corrective measures are taken.

H. Falsework forms shall be designed to carry loads imposed on them without exceeding the estimated soil bearing values and anticipated settlements.

I. When manufactured assemblies are used in falsework, furnish a letter of certification certifying that all components of such manufactured assemblies are used in accordance with the manufacturer's recommendations.

PART 2 – PRODUCTS

2.01 MATERIALS

A. Steel: Structural Steel conforming to ASTM and AASHTO specifications designated in Section 2.1.2 of AASHTO Guide Design Specifications for Bridge Temporary Works.

B. Lumber: Structural grade, dressed or rough.

PART 3 – EXECUTION

3.01 LAYOUT OF FALSEWORK

A. Locate and stake out all forms and falsework and establish all lines, levels, and elevations.

3.02 FALSEWORK CONSTRUCTION

A. Construct falsework in accordance with HSS Subsection 503.03(B) – Falsework, Formwork, or Centering:

1. Construct falsework to conform to the falsework drawings.
2. Falsework shall be founded on a solid footing safe against undermining, protected from softening, and capable of supporting the loads imposed on it.
3. Arrange falsework system so that loads imposed produce symmetrical and approximately equal reactions.
4. Use camber strips to compensate for falsework deflection, vertical alignment, and anticipated structure deflection.

B. When falsework is supported by piles, the piles shall be driven to a bearing value, as determined by the formula specified in Section 31 62 00 – Driven Piles, equal to the total calculated pile loading shown on the falsework drawings, or as detailed in the Geotechnical Report.

C. When falsework is over or adjacent to roadways, install all falsework system components that contribute to horizontal stability and resistance to impact, except for bolts in bracing, at the time each element of the falsework is erected. Such components shall remain in place until the falsework is removed.

D. Temporary Railing:

1. Install temporary railing on both sides of all vehicular openings through falsework, and at all other falsework located less than 12 feet from the edge of a traffic lane. Temporary railings shall begin approximately 50 feet in advance of such falsework and extend past the falsework in the direction of adjacent traffic flow.
2. Complete the installation of temporary railing before starting falsework erection.

3.03 REMOVAL OF FALSEWORK

A. Release and removal of falsework shall be in accordance with applicable requirements of HSS Subsection 503.03(D) – Removal of Falsework and Forms.

END OF SECTION

SECTION 03 15 00
CONCRETE ACCESSORIES

PART 1 – GENERAL

1.01 SUMMARY

A. Description: This Section includes the requirements for joint fillers, joint sealing compound, elastomeric joint seals, and plastic pads, spacers, and fillers.

B. Section Includes:

1. Examination
2. Preparation
3. Installation

C. Related Sections:

1. Section 03 11 00 – Concrete Forming

1.02 REFERENCES

A. ASTM International (ASTM):

1.	ASTM C272	Standard Test Method for Water Absorption of Core Materials for Structural Sandwich Constructions
2.	ASTM C578	Standard Specification for Rigid, Cellular Polystyrene Thermal Insulation
3.	ASTM D1621	Standard Test Method for Compressive Properties of Rigid Cellular Plastics
4.	ASTM D1622	Standard Test Method for Apparent Density of Rigid Cellular Plastics
5.	ASTM D3406	Standard Specification for Joint Sealant, Hot-Applied, Elastomeric-Type, for Portland Cement Concrete Pavements
6.	ASTM D6690 - 07	Standard Specification for Joint and Crack Sealants, Hot Applied, for Concrete and Asphalt Pavements
7.	ASTM E84	Standard Test Method for Surface Burning Characteristics of Building Materials

B. State of Hawaii Department of Transportation Standard Specifications (HSS):

1.	HSS Section 705	Joint Materials for Concrete Structures

1.03 SUBMITTALS

A. General: Refer to Section 7.7 – Submittal Procedures and Section 7.8 – Shop Drawings, Product Data, and Samples, for submittal requirements and procedures.

B. Shop Drawings: Submit drawings showing locations of all joints to be filled and sealed.

C. Product Data: Submit manufacturers' product data of joint fillers, sealing compounds, elastomeric joint seals, and plastic materials, verifying compliance with specified requirements.

D. Samples: Submit 12-inch-long sample of joint filler and elastomeric joint seals and 1-pint can of sealing compound.

1.04 QUALITY ASSURANCE

A. General: Refer to Section 7.10 – Quality Assurance, for quality assurance requirements and procedures.

PART 2 – PRODUCTS

2.01 MATERIALS

A. Joint Filler: Premolded, of sizes and thickness indicated conforming to HSS Subsection 705.01 – Joint Filler.

B. Joint Sealing Compound: Provide concrete joint sealant conforming to HSS Subsection 705.04(A) – Joint Sealer – Poured Joint Sealer.

C. Backer Rod: Conform to HSS Subsection 705.04(B) – Joint Sealer – Backer Rod.

D. Elastomeric Joint Seals: Conform to HSS Subsection 705.04(C) – Joint Sealer – Preformed Joint Sealer.

E. Lubricant Adhesive: Conform to HSS Subsection 705.04(C) – Joint Sealer – Preformed Joint Sealer, as applicable.

F. Plastic Pads, Spacers, and Fillers: Provide extruded closed-cell polystyrene rigid board meeting requirements of ASTM C578, Type V, with the following physical properties:

1. Minimum weight and density when tested in accordance with ASTM D1622: 3 pounds per cubic foot

2. Minimum compressive strength when tested in accordance with ASTM D1621: 100 pounds per square inch

3. Maximum water absorption when tested in accordance with ASTM C272: 0.10 percent by volume

4. Maximum allowable flame spread when tested in accordance with ASTM E84: 10 flame-spread index (UBC Class I)

PART 3 – EXECUTION

3.01 EXAMINATION

A. Verify that joint surfaces are dry to the extent recommended by the sealant manufacturer for successful sealant application and long service life.

B. Verify that ambient and concrete surface temperatures and humidity are within the ranges recommended by the manufacturer for successful sealant application.

3.02 PREPARATION

A. Thoroughly clean joints free of dirt, debris, dust, and laitance.

B. Where required, prime joint surfaces as recommended by the manufacturer of the joint sealing compound or elastomeric joint seal, as applicable.

C. Mix multi-component sealing compound as recommended by the manufacturer.

3.03 INSTALLATION

A. Installation/Application Requirements: Install joint fillers and sealing compounds in accordance with the respective manufacturers' installation and application instructions. Comply with ASTM D6690 and ASTM D3406 Appendix XI for application of sealants, as applicable. Coordinate the placement of joint fillers and secure them in position with the work of Section 03 11 00 – Concrete Forming.

B. Expansion (Isolation) Joints:

1. Provide premolded joint filler to full depth of slabs, less 1/2 inch. Install joint filler with top edge 1/2 inch below the surface, and tool adjacent concrete edges to a 1/4-inch radius. Use steel pins to hold material in place during placing and floating of concrete. Finished joints shall be tight and leak-proof.

2. A minimum of 28 days after slabs have been placed and finished, fill expansion joints with joint sealing compound to 1/8 inch below surface of slabs. No traffic shall be permitted to travel over sealed joints until sealing compound has properly cured.

C. Contraction (Control) Joints: Fill saw-cut contraction joints and weakened plane joints with joint sealing compound in areas and locations indicated. Joints shall be filled and tooled flush to within 1/16 inch of the slab surface.

D. Elastomeric Joint Seals for Roadway and Bridge: Provide elastomeric joint seals as applicable to the conditions. Install as indicated and in accordance with the manufacturer's installation instructions and recommendations.

E. Plastic Pads, Spacers, and Fillers: Install as indicated over or against clean surfaces. Apply adhesive, where required, to hold material in place.

END OF SECTION

This page intentionally left blank.

SECTION 03 15 10
CONCRETE ANCHORS

PART 1 – GENERAL

1.01 SUMMARY

A. Description: Requirements for furnishing all labor, materials, tools, and equipment, and performing all operations necessary for cast-in-place anchors, cementitious grouted anchors, post-installed (drilled-in) mechanical anchors, and post-installed (drilled-in) adhesive anchors for as indicated on the Design Plans and specified herein.

B. Section Includes:

1. General
2. Installation
3. Inspection
4. Field Quality Control
5. Repair and Restoration of Defective Work

1.02 REFERENCES

A. ASTM International (ASTM):

1.	ASTM A153	Standard Specification for Zinc Coating (Hot-Dip) on Iron and Steel Hardware
2.	ASTM A615	Standard Specification for Deformed and Plain Carbon-Steel Bars for Concrete Reinforcement
3.	ASTM A706	Standard Specification for Low-Alloy Steel Deformed and Plain Bars for Concrete Reinforcement
4.	ASTM B695	Standard Specification for Coatings of Zinc Mechanically Deposited on Iron and Steel
5.	ASTM C824	Practice for Specimen Preparation for Determination of Linear Thermal Expansion of Vitreous Glass Enamels and Glass Enamel Frits for the Dilatometer Method
6.	ASTM C1107	Standard Specification Packaged Dry, Hydraulic-Cement Grout (Nonshrink)
7.	ASTM E488	Test Methods for Strength of Anchors in Concrete and Masonry Elements
8.	ASTM F593	Standard Specification for Stainless Steel Bolts, Hex Cap Screws, and Studs
9.	ASTM F594	Standard Specification for Stainless Steel Nuts

10. ASTM F1554 — Standard Specification for Anchor Bolts, Steel, 36, 55, and 105-ksi Yield Strength

B. International Code Council Evaluation Service (ICC-ES):

1. AC193 — Acceptance Criteria for Mechanical Anchors in Concrete Elements
2. AC308 — Acceptance Criteria for Post-Installed Adhesive Anchors in Concrete Elements, Effective June 1, 2008

C. American Association of State Highway and Transportation Officials (AASHTO):

1. AASHTO LRFDUS-4 — LRFD Bridge Design Specifications: Article 14.5.3.7 – Bolts; Article 14.8.4 - Anchorage and Anchor Bolts
2. AASHTO M31 — Standard Specification for Deformed and Plain Billet-Steel Bars for Concrete Reinforcement
3. AASHTO M314 — Steel Anchor Bolts
4. AASHTO LTS-4-M — Standard Specification for Structural Supports for Highway Signs, Luminaires, and Traffic Signals: Article 5.17 - Anchor Bolts

D. American Concrete Institute (ACI):

1. ACI 318-{08} — Building Code Requirements for Structural Concrete, Appendix D - Anchoring to Concrete
2. ACI 355.2-{07} — Qualification of Post-Installed Mechanical Anchors in Concrete and Commentary

E. American National Standards Institute (ANSI):

1. Cutting Tools — Carbide-Tipped Masonry Drills and Blanks for Carbide-Tipped Masonry Drills

F. American Railway Engineering and Maintenance-of-Way Association (AREMA):

1. Chapter 15 — Bridge Bearings, Article 10.3.7 - Anchor Bolts and Rods

G. State of Hawaii Department of Transportation Standard Specifications (HSS):

1. HSS Section 709 — Reinforcing Steel, Wire Rope, and Prestressing Steel

1.03 SUBMITTALS

A. General: Refer to Section 7.7 – Submittal Procedures and Section 7.8 – Shop Drawings, Product Data, and Samples, for submittal requirements and procedures.

B. Product Specifications: Include recommended design values and physical characteristics for post-installed anchors including anchor embedment, test load and torque, and manufacturer's installation instructions.

C. Samples: Representative length and diameters of each type anchor shown on the Design Plans.

D. Test Reports: Certified test reports showing compliance with specified performance characteristics and physical properties.

E. Installer Qualifications and procedures: Submit installer qualifications as specified herein. Submit a letter of procedure stating method of drilling, the product proposed for use, the complete installation procedure, manufacturer's training date, and a list of the personnel to be trained on anchor installation.

F. Installation and Field Quality Control methods, including method of locating embedded reinforcing steel.

1.04 DELIVERABLES

A. Certificates:

1. ACI Evaluation Reports
2. ASTM Certifications
3. ICC-ES Evaluation Reports

B. Installation and testing methods.

C. Documentation:

1. Installation Inspection Record
2. Test Inspection Record: The test inspection record shall include, but not be limited to, the following information:
   a. General location of anchor and group represented
   b. Method of test or verification
   c. Test results, accepted or rejected
   d. Inspector's name
   e. Date of test
   f. Identification number of testing tool
3. Failed Anchor Documentation: Documentation for anchors is required for an anchor that does not pass the test acceptance criteria specified herein. Failed anchor documentation shall be submitted to HART. The documentation shall include, but not be limited to, the following:
   a. Exact location of failed anchor
   b. Reason for failure
   c. Repair steps taken
   d. Inspector's name
   e. Date of test

1.05 QUALITY CONTROL

A. An on-site Quality Control Program shall be provided for all post-installed adhesive anchors in accordance with ICC-ES AC308 Articles 14.3 and 14.4 and Annex A.

B. Full-time special inspection is required for all adhesive anchor systems together with proof load testing. Proof load testing alone is not recognized as meeting special inspection requirements.

C. Installer Qualifications: Post-installed anchors shall be installed by an installer with a minimum of five years experience performing similar installations.

D. Installer Training: Conduct thorough training with the manufacturer or the manufacturer's representative for the installer on the Project. Training shall consist of a review of the complete installation process for drilled-in anchors including, but not limited to, the following:

1. Hole drilling procedure
2. Hole preparation and cleaning technique
3. Adhesive injection technique and dispenser training/maintenance
4. Anchor element type, material, diameter, and length
5. Proof loading/torqueing

E. Certifications: Unless otherwise directed by HART, anchors shall have one of the following certifications:

1. ACI 355.2 Evaluation Report
2. ASTM Certification
3. ICC-ES Evaluation Report indicating conformance with applicable ICC-ES AC193 or ICC-ES AC308

F. Acceptance Criteria: A post-installed anchor is acceptable if the test load specified herein is attained without:

1. Slippage of more than:
   a. 1/16-inch for adhesive anchors
   b. 2.5-percent of the embedded length, rounded to the nearest 1/16-inch for mechanical anchors
2. Bolt failure
3. A sign of damage in the surrounding concrete

1.06 NOTED RESTRICTIONS

A. For bridge joints and bearings, only cast-in-place or cementitious grouted anchors shall be used. Anchor bolts may be swedged or threaded. Expansion (post-installed) anchors and countersunk anchor bolts shall not be used for bridge joints and bearings.

B. The capacities of post-installed anchors shall be determined per independent testing laboratory in accordance with ACI 355.2 or ICC-ES AC193 for post-installed mechanical anchors, or ICC-ES AC308 for post-installed adhesive anchors. In no case shall manufacturer's literature be relied upon to determine capacities.

C. Post-installed, torque-controlled expansion anchors and undercut anchors where not otherwise prohibited by ICC-ES AC193 are permitted for use in fire-resistant rated construction provided they conform to ICC-ES AC193 Article 6.2.2.

D. Adhesive anchors shall not be used in overhead applications or connections where anchors must resist sustained tension.

E. Adhesive anchors shall not be used where they will be exposed to sustained temperatures above 110 degrees Fahrenheit or short-term temperatures above 180 degrees Fahrenheit unless tested per ICC-ES AC308 for higher temperature.

F. Anchors shall not be used for seismic, vibration, fatigue, shock, or impact loadings unless specifically tested in accordance with ASTM E488 for the loading to which they will be subjected. Anchors shall not be used for blast loadings unless specifically tested for the loading to which they will be subjected.

G. Post-installed anchors shall not be used with lightweight concrete unless specifically tested per ICC-ES AC193, ICC-ES AC308, or ACI 355.2

1.07 DELIVERY, STORAGE, AND HANDLING

A. Store anchors in accordance with manufacturer's recommendations.

1.08 QUALITY ASSURANCE

A. Refer to Section 7.10 – Quality Assurance, for quality assurance requirements and procedures.

PART 2 – PRODUCTS

2.01 MATERIALS

A. Fasteners and Anchors:

1. Bolts and Studs: ASTM F1554 Grade 36/55/105, AASHTO M314. Where Grade 55 bolts are welded, ASTM F1554 S1 shall be required. Where bolts are designed for seismic, fatigue, vibration, shock, or impact, forces, Charpy V-Notch testing per ASTM F1554 S1, S4, and S5 shall be required.

2. Stainless Steel Bolts, Hex Cap Screws, and Studs: ASTM F593

3. Stainless Steel Nuts: ASTM F594

4. Zinc Coating: ASTM B695, Class 65

5. Hot-Dip Galvanizing: ASTM A153, Class C

6. Reinforcing Bars: Conform to HSS Subsection 709.01(A) – Reinforcing Steel-Bar Reinforcement

2.02 CAST-IN-PLACE BOLTS

A. Bolts and studs, nuts, and washers shall conform to ASTM F1554, hot-dip galvanized including associated nuts and washers in accordance with ASTM A153 or Stainless steel anchor bolts, studs, nuts, and washers shall conform to ASTM F593 and ASTM F594.

B. Grout shall conform to ASTM C1107 with no shrinkage and tested in accordance with ASTM C824.

C. Sleeves shall be corrugated, galvanized steel or corrugated high-density polyethylene.

2.03 POST-INSTALLED ANCHORS

A. Anchors for exterior, damp, or aggressive environment shall be Type 316 stainless steel.

B. Anchors for all other installations shall be hot-dip galvanized per ASTM A153 Class C or mechanically coated per ASTM B695, Class 65.

C. Post-installed mechanical anchors shall conform to ACI 355.2 or ICC-ES AC193.

D. Post-installed adhesive anchors shall conform to ICC-ES AC308.

E. Post-installed adhesive anchors shall be tested for simulated seismic loads per ICC-ES AC308 and ASTM E488

F. Post-installed adhesive shall be tested for long-term temperature exposure of 110 degrees Fahrenheit in accordance with ICC-ES AC308. Anchors that are subject to higher temperatures shall be tested for the temperature that is equal to or exceeds the maximum long-term service temperature per ICC-ES AC308.

G. Post-installed adhesive anchors shall be tested for short-term temperature exposure of 180 degrees Fahrenheit in accordance with ICC-ES AC308. Anchors that are subject to higher temperatures shall be tested for the temperature that is recommended in the manufacturer's printed literature.

H. Post-installed adhesive anchors shall be tested for installation in holes drilled with any method or drill other than a carbide-tipped bit using a rotary hammer drill per ICC-ES AC308.

I. Post-installed adhesive anchors shall be tested for installation in water-saturated concrete per ICC-ES AC308.

J. Post-installed adhesive anchors shall be tested for standing water in holes per ICC-ES AC308.

K. Post-installed adhesive anchors shall be tested for use in submerged concrete per ICC-ES AC308.

L. Post-installed mechanical anchors shall be tested for installation in holes drilled with any method or drill other than a carbide-tipped bit using a rotary hammer drill.

M. Post-installed mechanical anchors shall be tested for simulated seismic loads per ACI 355.2 and ASTM E488

N. Anchors shall be tested for vibration or fatigue loading in accordance with ASTM E488. Suitable testing provisions shall be included in the Specifications to simulate the type of load that the anchor will be subjected to during its use.

O. Anchors shall be tested for impact or shock loading in accordance with ASTM E488. Suitable testing provisions shall be included in the Specifications to simulate the type of load that the anchor will be subjected to during its use.

PART 3 – EXECUTION

3.01 GENERAL

A. Training: Installer Training: Implement a training and/or qualification program for installers of post-installed anchors. Anchor installers shall be trained and made fully familiar with the manufacturer's installation procedures including additional requirements as specified or as directed.

B. Examination/Site Verification of Conditions:

1. The use of anchors shall be restricted to the applications and installations as indicated on the Design Plans.

2. Post-installed anchors may only be installed in sound concrete. Surfaces showing obvious distress by way of porosity, disintegration, carbonation, and cracks over 0.02-inch in width and 12-inches or longer and within the distance of the embedment length shall be reported to HART for evaluation.

C. Preparation:

1. Existing reinforcement shall be exposed as indicated on the Design Plans to establish the reinforcement pattern before drilling.

2. No cutting of reinforcement will be permitted without prior written approval from HART. Multi-cutting of the same bar is considered as one cut.

3. Reinforcement will be considered to be cut if:
   a. For No. 4 through No. 7: Cuts, nicks, or drill into bar body are greater than 1/16-inch
   b. For No. 8 and Larger: Cuts, nicks, or drill into bar body are greater than 1/8-inch

4. When installing anchors through cut reinforcement, the anchoring mechanism shall be located at least two anchor diameters beyond the cut reinforcement.

3.02 INSTALLATION

A. Cast-In-Place Anchors: Use templates to locate bolts accurately and securely in formwork.

B. Anchors shall be installed according to the location, spacing, and edge distances specified in the Design Plans.

C. Post-installed anchors shall be installed in accordance with the ICC-ES reports and manufacturer's installation instructions. Where installation criteria differ, the order of precedence from highest to lowest is 1) this Specification; 2) the ICC-ES reports; 3) the manufacturer's installation instructions.

D. Holes for post-installed anchors shall be drilled with carbide-tipped bits using rotary hammer drills meeting the requirements of ANSI B212.15 unless ICC-ES AC193 or ICC-ES AC308 testing demonstrates that using percussive drilling or another type(s) of bit, including core drills, is acceptable. Drilled holes shall be cleaned of chips, dust, loose material, and water prior to anchor installation. The hole diameters and depths shall be as recommended in the manufacturer's instructions. The hole diameter shall be checked every ten holes for conformance to the hole tolerances specified in ICC-ES AC308 for

adhesive anchors, ICC-ES AC193 or ACI 335.2 for mechanical anchors. Verify depth of the concrete member before drilling holes. The embedment depth of the post-installed anchor shall not exceed the greater of 2/3 of the concrete member thickness or the concrete member thickness minus 4-inches. Contact HART if these requirements cannot be met based on the actual member thickness.

E. Anchors shall be installed perpendicular to the concrete surface within a plus or minus 5 degree tolerance. Post-installation verification of this criterion may be satisfied by visual inspection to verify proper seating of the nut and washer.

F. In areas where concrete has been removed, the minimum anchor embedment shall be measured from the surface of sound concrete.

G. Unless otherwise noted on the Design Plans, the spacing requirements indicated in the applicable ICC ES report shall be used.

H. Bending and welding of post-installed anchors is not permitted.

I. The nut thread engagement for the anchors (studs) shall be such that the bolt threads project past the outside face of the nut when completely installed.

J. The length identification code on the head of the anchor shall not be damaged during installation. Anchor projection may be cut-off subject to the approval of HART and documentation of the location, embedment, and length code.

K. Unused anchors shall be driven in and cut-off flush. Cut-off anchors shall be considered an abandoned ungrouted hole for future anchor spacing requirements.

L. Care shall be exercised to avoid bending anchors to match base plate holes, or loosening of anchors by prying sideways after tightening. Care shall also be exercised to ensure that the cone nut of an undercut anchors does not become loose from the stud during the setting or tensioning operation.

M. Non-grouted base plates may have a maximum 1/8-inch gap as evidenced under exterior edges around the plate provided that 1) the plate exhibits bearing contact within its interior against the concrete surface; and 2) the uneven bearing does not prevent application of the prescribed torque. If an unacceptable bearing contact condition exists, one of the following procedures shall apply:

1. The concrete surface shall be reworked to obtain a proper fit.

2. For gaps of up to 1-inch, the base plate may be grouted instead using the following technique:
   a. Insert post-installed anchors and set the base plate.
   b. Insert nuts to finger-tight condition.
   c. Install shims positioned no more than 1/2-inch away from the anchors to reduce gaps between base plate shims to 1/8-inch or less at anchor locations.
   d. Apply tightening torque. The bolt tightening shall not be performed when interior shims under the base plates have been placed away from anchors so that downward bending of the base plate would result upon tightening. Shims shall be moved as close as possible to the anchors before applying the installation torque.

e. Fill the gap with non-shrink grout leaving the shims in place. For base plates on walls where grouting is not feasible, the gap may be filled with shim plates. The shims may be stacked but no more than four shims shall be stacked.

N. Relocating Holes Within Base Plates: The base plate with bolts may be relocated no more than 1-inch in any direction with respect to the attachment principal axis unless otherwise noted on the Design Plans.

3.03 INSPECTION

A. All anchors shall be visually inspected in order to verify and document that they have been installed as specified herein. As a minimum, inspection attributes for post-installed anchors shall comply with the special inspection section of the applicable ICC-ES report (with the exception of validating the strength of existing concrete) plus additional attributes imposed by this Specification. These attributes of inspection shall be identified in the inspection report documentation.

B. If visual inspection reveals that the installed anchor does not meet the specified requirements, the anchor shall be relocated as permitted by this Specification, or shall be removed and replaced by another anchor, or referred to HART for evaluation.

3.04 FIELD QUALITY CONTROL

A. Minimum anchor embedments, test (proof) loads, and torques shall be as shown on the approved shop drawings.

B. Testing of post-installed anchors shall be witnessed by the Inspector. Test of post-installed anchors is mandatory.

C. Testing Method: Post-installed anchors shall be tested by the direct tension method as follows:

1. Direct Tension Method: A tensile load as defined herein below is applied. If the tension load is applied by jacking against the concrete, the jacking pressure is to be distributed outside of an area having its center at the post-installed anchor and its diameter, or least dimension, equal to the required anchor spacing as given in the ICC ES report. Post-installed anchors tested by this method shall be retightened by applying the installation torques.

2. Testing shall be in accordance with ICC-ES AC308 Figure 5-1 or ACI 355.2 and ASTM E488.

D. Test (Proof) Load: Tension test (proof) load shall be as indicated on the approved shop drawings.

1. For post-installed adhesive anchors, the test shall be equal to the lesser of:

a. A tensile load equal to 80-percent of the specified nominal yield strength of the anchor bolt material times the tensile area of the bolt; or

b. A tensile load equal to twice the design load and at least 50-percent of the expected ultimate load based on the adhesive bond strength shown in the ICC-ES report, whichever is greater.

2. For post-installed mechanical anchors, the test load shall be a tensile load equal to 80 percent of the specified nominal yield strength of the anchor bolt material times the tensile area of the bolt.

E. Test Frequency: Unless otherwise specified, the following test frequencies shall apply:

1. Post-Installed Mechanical Anchors: All anchors shall be tension-tested.

2. Post-Installed Adhesive Anchors: All anchors shall be tension-tested.

3.05 REPAIR AND RESTORATION OF DEFECTIVE WORK

A. Remove and replace misplaced or malfunctioning anchors. Fill empty anchor holes and patch failed anchor locations with high-strength non-shrink, nonmetallic grout. Anchors that fail to meet proof load or installation torque requirements shall be regarded as malfunctioning.

B. Abandoned holes shall be grouted with non-shrink grout. When post-installed anchors fail to meet the acceptance criteria under inspection and testing, the following repairs may be undertaken:

1. When failure is due to excessive anchorage pullout, contact HART to evaluate the damage and approve a repair method. If approved, the anchor may be reset once prior to redrilling the hole and installing an anchor of equal size. Use the minimum spacing embedment depth, and installation torque required for the original anchor.

2. When failure is due to breaking of the anchor, slippage or loosening, bending, improper installation or poor attachment, remove the defective anchor, redrill the hole, and install the same diameter anchor if the integrity of surrounding concrete has not been disturbed.

3. For cases where excessive slippage upon torquing is experienced, or usage of the same hole is not possible, fill the existing hole with non-shrink grout and relocate the anchor location.

4. When failure is due to breakout of concrete around the anchor, HART will develop an appropriate repair. Contact HART to evaluate the damage and repair method. Local spalling of the concrete around the anchor, up to a maximum depth of 1/4-inch, is not considered a concrete breakout failure.

5. Mislocated anchors may be cut flush with concrete surface, and need not be removed if they do not interfere with subsequent installations.

6. Mislocated anchors or anchors installed for temporary applications may be left in place. Those anchors that must be removed to accommodate other attachments, aesthetics, or safety of personnel may be removed completely or abandoned in place by cutting off beneath the surface after chipping the concrete 1-inch minimum and patching with epoxy grout. Mislocated anchors that will be covered by a base plate or an attachment may be cut-off flush with the concrete. In the event that an anchor must be removed from the hole and a new anchor installed, the removal and installation of the new anchor shall be in accordance with the manufacturer's specifications. The abandoned hole or removed concrete shall be filled with non-shrink grout.

7. Removal of installed anchors for inspection or replacement may be performed by using a bolt extractor as manufactured by Drillco Devices, Ltd., or approved equal.

8. Retest all replaced anchors as specified herein.

END OF SECTION

This page intentionally left blank.

SECTION 03 15 13
WATERSTOPS

PART 1 – GENERAL

1.01 SUMMARY

A. Description: This Section includes specifications for furnishing and installing waterstops in concrete as indicated.

B. Section Includes:

1. Installation
2. Splicing
3. Field Quality Control

1.02 REFERENCES

A. U.S. Army Corps of Engineers, Concrete Research Division (CRD):

1. CRD-C572 Polyvinylchloride Waterstops

B. State of Hawaii Department of Transportation Standard Specifications (HSS):

1. HSS Section 705 Joint Materials for Concrete Structures

1.03 SUBMITTALS

A. General: Refer to Section 7.7 – Submittal Procedures and Section 7.8 – Shop Drawings, Product Data, and Samples for submittal requirements and procedures.

B. Shop Drawings: Submit drawings showing locations of all joints to receive waterstops and methods of supporting waterstops in forms without displacement from pressure of concrete placement.

C. Certificate of Compliance: Submit Certificate of Compliance to show that waterstops proposed for use conforming to the Contract requirements and test results.

D. Product Data: Submit manufacturers' product data of proposed waterstops for review.

E. Samples: At HART's request, submit a 12-inch-long sample of typical waterstop and sample of field splice for review.

1.04 DELIVERY, STORAGE, AND HANDLING

A. Storage and Handling Requirements:

1. Store waterstops in a manner that provides free circulation of air around the material.
2. Protect waterstop material from direct sunlight while in storage, and when only partially encased in concrete for over 48 hours.

1.05 QUALITY ASSURANCE

A. General: Refer to Section 7.10 – Quality Assurance, for quality assurance requirements and procedures.

PART 2 – PRODUCTS

2.01 MATERIALS

A. Material for rubber waterstops shall conform to HSS Subsection 705.07(A) – Waterstop – Rubber Waterstop.

B. Material for polyvinyl chloride (PVC) waterstops shall conform to the U.S. Army Corps of Engineers' Specification No. CRD-C572 and HSS Subsection 705.07(B) – Waterstop – PVC Waterstop.

C. Waterstops shall be manufactured by a process that ensures they will be dense, homogenous, and free from holes and other imperfections. The cross-section of the waterstop shall be uniform and symmetrical along its entire length.

D. Waterstops shall have the cross-sectional shape and dimensions indicated. Split-leg waterstops will not be permitted.

PART 3 – EXECUTION

3.01 INSTALLATION

A. Provide waterstops for all construction joints in exterior walls, base slabs, suspended slabs, roof slabs, and other locations as indicated.

B. Install waterstops accurately in place and secure rigidly against movement by methods adequate to assure proper support and embedment during the placement of concrete.

C. Unless otherwise indicated, install waterstops so that embedment in concrete will be equal on both sides of the joint.

D. Install waterstops in the longest practicable length, with joints spliced to form a continuous watertight seal for the full length of the joint.

E. Carefully place and consolidate concrete to ensure a complete filling and bond between the concrete and waterstop. A cement/sand grout slurry may be used, where necessary, to assure contact and bond of waterstop and concrete without voids.

F. When installed in an expansion joint, locate waterstop so the closed hollow center bulb remains in the gap of the joint, to allow for maximum elongation with minimum stress on the portion of the waterstop embedded in concrete. Install expansion joint material and a sealant in the joint, as indicated, to prevent foreign matter from accumulating in the joint area. When a sealant is used, place a separator (backer rod) between the sealant and the waterstop to assure that the waterstop and sealant both perform properly.

G. Repair or replace damaged, defective, or misaligned waterstop material in accordance with the manufacturer's instructions.

3.02 SPLICING

A. PVC waterstops shall be butt-spliced by applying a thermostatically controlled electric source of heat and welding material, in accordance with the manufacturer's splicing instructions. Rubber waterstops shall be butt-spliced by field vulcanizing. Lapped splices will not be permitted. Splices shall have a tensile strength not less than 60 percent of the unspliced materials' tensile strength. Maintain continuity of waterstop and bulbs.

B. PVC waterstops requiring splices other than butt-splice shall be produced in the shop.

3.03 FIELD QUALITY CONTROL

A. Waterstops and their joints shall be inspected for misalignment, bubbles, inadequate bond, porosity, cracks, offsets, and other defects that could reduce the effectiveness of joints against water penetration.

END OF SECTION

This page intentionally left blank.

SECTION 03 20 00
CONCRETE REINFORCING

PART 1 – GENERAL

1.01 SUMMARY

A. Description: This Section includes specifications for furnishing storing, and placing steel reinforcing bars, epoxy-coated reinforcing bars, wire and spiral reinforcement, welded wire fabric, steel bar mats, tie wire, mechanic couplers, and reinforcing accessories.

B. Section Includes:

1. Verification of Conditions
2. Installation
3. Protective Concrete Cover
4. Cleaning
5. Field Quality Control

C. Related Sections:

1. Section 03 05 18 – Prestressed Concrete
2. Section 03 30 00 – Cast-In-Place Concrete
3. Section 03 40 00 – Precast Concrete
4. Section 31 62 00 – Driven Piles
5. Section 32 16 13 – Concrete Curbs and Gutters

1.02 REFERENCES

A. American Concrete Institute (ACI):

1.	ACI 301	Specifications for Structural Concrete
2.	ACI 315	Details and Detailing of Concrete Reinforcement
3.	ACI 318	Building Code Requirements for Structural Concrete

B. ASTM International (ASTM):

1.	ASTM A370	Standard Test Methods and Definitions for Mechanical Testing of Steel Products
2.	ASTM A775	Standard Specification for Epoxy-Coated Steel Reinforcing Bars
3.	ASTM A934	Standard Specification for Epoxy-Coated Prefabricated Steel Reinforcing Bars

4. ASTM D3963 Standard Specification for Fabrication and Jobsite Handling of Epoxy-Coated Steel Reinforcing Bars

5. ASTM E8 Standard Test Methods for Tension Testing of Metallic Materials

6. ASTM E165 Standard Test Method for Liquid Penetrant Examination

C. American Welding Society (AWS):

1. AWS D1.4 Structural Welding Code – Reinforcing Steel

D. Concrete Reinforcing Steel Institute (CRSI):

1. CRSI Publication Manual of Standard Practice

2. CRSI Publication Placing Reinforcing Bars

E. State of Hawaii Department of Transportation Standard Specifications (HSS):

1. HSS Section 709 Reinforcing Steel, Wire Rope and Prestressing Steel

1.03 SUBMITTALS

A. General: Refer to Section 7.7 – Submittal Procedures and Section 7.8 – Shop Drawings, Product Data, and Samples, for submittal requirements and procedures.

B. Shop Drawings:

1. Submit bar lists, bending diagrams and schedules, and placement plans and details for all reinforcing steel. Bar lists shall include weights.

2. Indicate descriptions, details, dimensions, arrangements and assemblies, and locations of reinforcing steel. Include the number of pieces, sizes, and markings of reinforcing steel, laps and splices, supporting devices and accessories, and other information required for fabrication and placement. Indicate adjustments required, as specified in Article 1.04C herein.

3. Refer to Design Plans for anchor bolt schedules and locations, anchors, hangers, inserts, conduits, sleeves, blockouts, and other items to be cast in concrete for possible interference with reinforcing steel. Indicate required clearances on shop drawings.

4. Detail reinforcing steel in accordance with requirements of ACI 315. Indicate the individual weight of each bar, total weight of each bar size, and total weight of all bars on the list. Base calculated weights on nominal weights specified in ACI 318, "Appendix on Steel Reinforcement Information."

C. Product Data:

1. Submit manufacturers' product data and installation instructions for proprietary manufactured materials and reinforcement accessories.

2. Submit manufacturers' product data and installation instructions for proprietary exothermic metal splicing systems and proprietary mechanical coupler splicing systems when such splicing methods are permitted.

D. Samples:

1. When epoxy-coated reinforcing bars are indicated, furnish two 12-inch-long samples and two additional samples bent to the minimum radius of the rebar from each size and lot shipped to the jobsite.

2. Samples shall be representative of the materials furnished. These samples and additional random samples taken by HART may be tested for compliance with these Specifications.

3. Failure of any sample to meet the requirements of these specifications shall be cause for rejection of that lot.

E. Certificates:

1. For each lot or load of reinforcing steel delivered to the work site, furnish mill affidavits or test reports of compliance or similar certification certifying the grades and physical and chemical properties of the reinforcing steel, and conformance with applicable ASTM specifications including ASTM A370, Method A9.

2. Furnish certificates for epoxy-coated reinforcing bars in compliance with ASTM A775, ASTM A934, and ASTM D3963.

3. For welders, furnish welding certificates or affidavits attesting to the welders' qualifications to perform the indicated welding in accordance with applicable requirements of AWS D1.4.

4. For exothermic sleeve coupler splicing, furnish certificates or affidavits attesting to the crew's special qualifications to perform the splicing.

1.04 QUALITY ASSURANCE

A. General: Refer to Section 7.10 – Quality Assurance, for quality assurance requirements and procedures.

B. Tolerances:

1. Fabrication: Fabricate bars to meet the following tolerances:
   a. Sheared length: plus or minus 1 inch.
   b. Depth of truss bars: plus 0, minus 1/2 inch.
   c. Overall dimensions of stirrups, ties and spirals: plus or minus 1/2 inch.
   d. All other bends: plus or minus 1 inch.
   e. Fabrication tolerances not indicated on the Design Plans or specified herein-above shall comply with the applicable requirements of ACI 301 and the CRSI "Manual of Standard Practice," Section 7.

2. Placement: Place bars to the following tolerances:
   a. Clear distance to formed surfaces: plus or minus 1/4 inch.
   b. Minimum spacing between bars: minus 1/4 inch.
   c. Top bars in slabs and beams: 1) Members 8 inches deep or less: plus or minus 1/4 inch; 2) Members greater than 8 inches but less than 2 feet deep: plus or minus 1/2 inch; and 3) Members 2 feet or more deep: plus or minus 1 inch.
   d. Crosswise of members: spaced evenly within 2 inches.

e. Lengthwise of members: plus or minus 2 inches.

f. Placement tolerances not indicated on the Design Plans or specified herein-above shall comply with the requirements of ACI 301, ACI 318, or the CRSI "Manual of Standard Practice," as applicable.

C. Adjustments: Bars may be moved as necessary to avoid interference with other reinforcing steel, conduits, or embedded items. If bars are moved more than one bar diameter or in excess of the above tolerances, the resulting arrangement of bars shall require HART's approval. Minimum spacings shall not be decreased, and the required number of bars shall be placed. Bars moved to permit access for cleanup operations shall be properly replaced and secured before the start of concrete placement.

1.05 DELIVERY, STORAGE, AND HANDLING

A. Deliver reinforcing bars to the fabricator in bundles, limited to one size and length of bar, securely tied and identified with plastic tags in an exposed position indicating the mill, melt or heat number, and grade and size of bars.

B. Deliver steel reinforcement to the work site. Store and cover in a manner that will ensure that no damage occurs to it from moisture, dirt, grease, oil, or other causes that might impair bond with concrete.

C. Deliver steel reinforcement to the work site properly tagged and identified, as specified in Article 2.03 herein, and in accordance with approved shop drawings.

D. Handle and store epoxy-coated reinforcement in a manner which will prevent damage to coatings. Comply with the requirements of ASTM D3963.

E. Maintain identification of steel reinforcement after bundles are broken.

F. Provide special facilities for storage and handling of exothermic materials, as recommended by the splicing system manufacturer.

PART 2 – PRODUCTS

2.01 MATERIALS

A. Steel Reinforcing Bars: Conform to HSS Subsection 709.01(A) – Reinforcing Steel-Bar Reinforcement.

B. Epoxy-Coated Reinforcing Bars: Conform to HSS Subsection 709.01(A) – Reinforcing Steel-Bar Reinforcement. Reinforcement shall be epoxy coated in accordance with ASTM A775, ASTM A934, and ASTM D3963. Coating material shall conform to ASTM A775 and ASTM D3963, Annex A1, green in color. Furnish acceptance test reports for each lot of epoxy-coated bars delivered to the site. Bars shall be cut and bent cold before applying coating material.

C. Wire and Spiral Reinforcement: Conform to HSS Subsection 709.01(B) – Reinforcing Steel – Steel Wire Reinforcement.

D. Welded Steel Wire Fabric – Plain Wire: Conform to HSS Subsection 709.01(C) – Reinforcing Steel – Welded Wire Fabric Reinforcement.

E. Welded Steel Wire Fabric – Deformed Wire: Conform to HSS Subsection 709.01(C) – Reinforcing Steel – Welded Wire Fabric Reinforcement.

F. Steel Bar Mats: Conform to HSS Subsection 709.01(D) – Reinforcing Steel – Bar Mat Reinforcement.

G. Accessories: Provide reinforcement accessories consisting of bar supports, spacers, hangers, chairs, ties, and similar items as required for spacing, assembling, and supporting reinforcement in place. Conform to referenced CRSI standards and the following requirements:

1. For footings, grade beams, and slabs on grade, provide supports with precast concrete or mortar bases or plates or horizontal runners where wetted base materials will not support chair legs.
2. For exposed-to-view concrete surfaces, where legs of supports are in contact with forms or in close proximity to finish surfaces, provide supports with legs that are galvanized, plastic-protected, or stainless steel.
3. For epoxy-coated reinforcement, provide accessories which are nylon-, epoxy-, or plastic-coated.

H. Tie Wire: No. 16 gage or heavier, soft or commercial-grade steel tie wire. Where tie wire is in close proximity to finish surfaces of exposed-to-view concrete, provide soft stainless steel wire.

I. Dowels: Conform to HSS Subsection 709.01(E) – Reinforcing Steel – Dowels.

J. Welding Electrodes: E90XX low-hydrogen electrodes (for shielded metal arc welding).

K. Exothermic Metal-Filled Sleeve Coupler:

1. System Description: Provide bar splicing connection produced by a standard exothermic process where molten filler metal, contained by a high-strength steel sleeve of larger inside diameter than adjoining bars, is introduced into the annular space between the bars and the sleeve and between the ends of the bars. Splicing system shall produce complete fusion with 100-percent penetration of the joint.
2. Spliced Strength in Compression and Tension: 125 percent of the yield strength of connected reinforcing bars.

L. Mechanical Splice Coupler:

1. System Description: Provide bar-splicing connections produced by threaded reinforcing bar ends and threaded coupler, or by sleeves hydraulically pressed or forged onto butt-ended reinforcing bars, or by another proprietary mechanical splicing method proposed by the Contractor and approved by HART. Mechanical splice couplers shall be capable of being installed in the clear space indicated and providing the required clearances.
2. Spliced Strength in Compression and Tension: Minimum 125 percent of the yield strength of connected reinforcing bars, unless otherwise indicated.

2.02 FABRICATION

A. Fabrication Standards: Fabrication of steel reinforcement shall be in accordance with the Design Plans and approved shop drawings. Where specific details are not indicated, comply with applicable requirements of ACI 301, ACI 318, and the CRSI "Manual of Standard Practice."

B. Cutting and Bending: Cutting and bending shall be performed at a central location that is equipped and suitable for the purpose. Bars shall be accurately cut and bent as indicated.

Bars shall be bent cold. Heating of bars for bending or straightening will not be permitted. Bars shall not be bent or straightened in any manner that will injure the material. Label all bars in accordance with bending diagrams and schedules, and secure like pieces in bundles when appropriate.

C. Welding:

1. Welding of reinforcement where indicated and approved, including preparation of bars, shall conform to applicable requirements of AWS D1.4. Welders shall be prequalified in accordance with AWS D1.4, Section 6.

2. Use full penetration butt welds by the electric-arc method, unless otherwise indicated or approved. Weld splices shall develop 125 percent of the specified yield strength of the bars, or of the smaller bar in transition splices.

3. Clean bars of oil, grease, dirt, and other foreign matter and flame dry before welding. Preheat bars before welding in accordance with AWS D1.4, Section 5. Stagger splices in adjacent bars a minimum of 48 inches.

D. Repair epoxy coatings damaged by shipping, handling, or cutting and bending as specified in ACI 301, ASTM A775, and ASTM D3963, as applicable.

2.03 IDENTIFICATION

A. Reinforcing steel shall be bundled and tagged with grades and sizes, heat numbers, and suitable identification marks for checking, sorting, and placing. Sizes and mark numbers shall correspond to placing shop drawings and schedules. Tags and markings shall be water resistant and shall not be removed until steel reinforcement is placed in position.

PART 3 – EXECUTION

3.01 VERIFICATION OF CONDITIONS

A. Verify that surfaces over or against which concrete is to be placed are clean and in proper condition for placing reinforcement.

B. Verify that items to be embedded in concrete inserts, sleeves, and block-outs are secured in place as required.

3.02 INSTALLATION

A. Placing Standards: Reinforcing steel shall be placed in accordance with the Design Plans, approved shop drawings, and applicable requirements of ACI 301, ACI 318, the CRSI "Manual of Standard Practice," and the CRSI publication "Placing Reinforcing Bars." Install reinforcement accurately and secure against movement, particularly under its own weight, the weight of workers, and the placement of concrete.

B. Reinforcing Supports: Bars shall be supported on metal or plastic chairs, spacers, and hangers, accurately placed, and securely fastened to steel reinforcement in place. Support legs of accessories in forms without embedding in the form surface. Hoops and stirrups shall be accurately spaced and wired to the reinforcement.

C. Placing and Tying: Reinforcing steel shall be installed in place, spaced, and rigidly and securely tied or wired with tie wire at all splices and at crossing points and intersections in the positions indicated. It is not necessary to tie bars at every intersection. Comply with requirements of the CRSI publication "Placing Reinforcing Bars," Section 10. Snap ties

are acceptable for intermediate intersections. Rebending of bars on the job to fit different conditions will not be permitted. Point ends of wire ties away from adjacent form surfaces.

D. Spacing: Center-to-center distance between parallel bars shall be in accordance with the Design Plans or, where not indicated, the minimum clear spacing shall be in accordance with ACI 318.

E. Longitudinal Location of Bends and Ends of Bar: A maximum of ±3 inches from the indicated location will be permitted, provided that the specified protective concrete cover at the ends of members is not reduced by more than 1/2 inch.

F. Splices:

1. Lapped Splices:
   a. Laps of splices shall be securely tied together to maintain the alignment of the bars, provide the required minimum clearances, and transfer stress by bond. Lapped splices and development lengths not shown shall be detailed to develop Class B lapping lengths and development lengths in tension, respectively, in accordance with ACI 318.
   b. Splices of adjacent bars shall be staggered a minimum clear offset of 2 feet between splices. Splices shall be tied with tie wire, or splices may be lap welded in accordance with AWS D1.4. Lapped splices are not permitted for No. 14 and No. 18 bars, or when specifically excluded by the Contract, regardless of size.

2. Exothermic Metal-Filled Coupler Splices: Conform to the product manufacturer's installation instructions and recommendations and with applicable requirements of AWS D1.4 for exothermic welding.

3. Mechanical Coupler Splices:
   a. Perform installation of coupler and tightening of joint assembly in accordance with the coupler manufacturer's installation instructions and recommendations.
   b. Reinforcing bars to be joined shall be shop threaded using special machinery to produce the required tapered threads. Where previously threaded bars must be cut or threads are damaged, bars shall be replaced or an alternate splicing system approved by HART shall be substituted. Bars shall not be rethreaded and damaged threads shall not be repaired in the field.
   c. Prior to joining, inspect all threads to assure that they have been properly made and are clean.
   d. Rotate coupler and bar initially by hand or wrench until snug (approximately 3-1/4 to 4 turns). Apply 24-inch-minimum pipe wrench and turn coupler (or bar) until further turning is resisted with the application of a minimum torque of 200 foot-pounds. Suitably mark joint to indicate that tightening has been completed.
   e. For proprietary mechanical splicing systems not specified herein, installation shall conform to the manufacturer's installation instructions.

4. Spiral Reinforcement Splices: Splices shall conform to applicable requirements of ACI 318.

G. Dowels:

1. Provide dowels where indicated or required for connecting construction, and for maintaining structural and reinforcement continuity. Dowels shall be tied securely in place before concrete is deposited. Provide additional bars for proper support and anchorage where required. Do not bend dowels after embedment.

H. Welded Wire Fabric:

1. Wire fabric shall be installed in lengths as long as practicable and shall be wire-tied at all laps and splices. End laps shall be offset in adjacent widths. Lap welded wire fabric in accordance with applicable requirements of ACI 318.

2. Where required, welded wire fabric shall be secured in position with suitable supports, accessories, and tie wire, as indicated and required to ensure against movement from workers and placement of concrete. Lift fabric as concrete is placed to assure proper embedment at position indicated.

3.03 PROTECTIVE CONCRETE COVER

A. Minimum concrete coverage for steel reinforcement shall be as specified in ACI 301, ACI 318, and the CRSI "Manual of Standard Practice." If there is a conflict between the standards specified, the thicker concrete coverage shall govern.

B. Minimum concrete coverage for reinforcement of drilled shafts shall be 6 inches measured to spirals or ties from the inside face of the casing.

3.04 CLEANING

A. Reinforcement at the time of depositing concrete shall be free of corrosion and coatings that may impair bond with concrete, such as form oil, mill scale, or loose deposits of rust and other corrosion.

3.05 FIELD QUALITY CONTROL

A. In accordance with Section 7.12 – Quality Control, quality control inspections and tests to be performed by the Contractor shall include the following:

1. Placement of Reinforcing Steel: Visual inspection of reinforcing steel in place, including bar supports, tied laps and intersections, welded wire fabric, and bar mats.

2. Welds:
   a. Visual inspection of reinforcing bar welds.
   b. Tension tests of welded butt joints. Tests shall be performed on sample welds produced by the Contractor in accordance with ASTM E8.
   c. Nondestructive tests of installed welded butt joints shall be performed in accordance with ASTM E165.
   d. Inspections and tests shall be performed in accordance with the applicable requirements of AWS D1.4, Sections 6 and 7.

3. Exothermic/Coupler Splices:
   a. Continuous visual inspection for the first 8 hours, minimum, of the work as performed by any crew, and performed again by any replacement crew. All splices shall require visual inspection before concrete may be placed.

b. Visual inspection shall be performed in accordance with the product manufacturer's instructions and recommendations for such inspection.

c. Inspections shall measure and record all voids. Exothermic rebar splices shall be accepted, provided that measured void limits for each end do not exceed the manufacturer's specified void limits.

d. Splices indicating improper fill, slag at tap hole, or blowouts shall be rejected.

4. Mechanical Coupler Splices: Test 100 percent of the couplers using calibrated torque wrench. Tighten couplers to the minimum turning torque as required by the manufacturer to the extent that further turning is resisted. Where tests reveal failure of couplers to be properly tightened, couplers shall be removed and replaced.

B. For exothermic/coupler splices, provide qualification splices for each position as follows:

1. One sample splice for the first 25 splices. Thereafter, one sample splice for every 50 splices.

2. Sample splices shall be laboratory tested by HART for strength in tension (125 percent of the yield strength of connecting bars).

END OF SECTION

This page intentionally left blank.

SECTION 03 30 00

CAST-IN-PLACE CONCRETE

PART 1 – GENERAL

1.01 SUMMARY

A. Description: This Section includes specifications for conveying and placing cast-in-place concrete as indicated. The Work consists of constructing portland cement concrete bridges, station platforms, buildings, station platform ramps, viaducts, culverts, head walls, retaining walls, abutments, piers, concrete topping on metal decks and deck slabs of steel and concrete, and slabs on grade, except those included in other Sections.

B. Section Includes:

1. Conveying and Placing Concrete
2. Placement under Water
3. Consolidation
4. Construction Joints
5. Expansion and Contraction Joints
6. Curing and Protection
7. Repair of Surface Defects
8. Vapor Barrier
9. Concrete Slabs on Grade

C. Related Sections:

1. Section 03 05 15 – Portland Cement Concrete
2. Section 03 11 00 – Concrete Forming
3. Section 03 15 00 – Concrete Accessories
4. Section 03 20 00 – Concrete Reinforcing
5. Section 03 35 00 – Concrete Finishing

1.02 REFERENCES

A. American Concrete Institute (ACI):

1.	ACI 117	Standard Specification for Tolerances for Concrete Construction and Materials
2.	ACI 301	Standard Specifications for Structural Concrete
3.	ACI 302.1R	Guide for Concrete Floor and Slab Construction

4. ACI 303.1 Standard Specification for Cast-In-Place Architectural Concrete

5. ACI 304R Guide for Measuring, Mixing, Transporting, and Placing Concrete

6. ACI 304.2R Placing Concrete by Pumping Methods

7. ACI 305R Hot Weather Concreting

8. ACI 318 Building Code Requirements for Structural Concrete

9. ACI 503.2 Standard Specification for Bonding Plastic Concrete to Hardened Concrete with a Multi-Component Epoxy Adhesive

B. ASTM International (ASTM):

1. ASTM C94 Standard Specification for Ready-Mixed Concrete

2. ASTM C881 Standard Specification for Epoxy-Resin-Base Bonding Systems for Concrete

3. ASTM E96 Standard Test Methods for Water Vapor Transmission of Materials

4. ASTM E154 Standard Test Methods for Water Vapor Retarders Used in Contact with Earth Under Concrete Slabs, on Walls, or as Ground Cover

5. ASTM E1643 Standard Practice for Installation of Water Vapor Retarders Used in Contact with Earth or Granular Fill Under Concrete Slabs

6. ASTM E1745 Standard Specification for Water Vapor Retarders Used in Contact with Soil or Granular Fill Under Concrete Slabs

C. State of Hawaii Department of Transportation Standard Specifications (HSS):

1. HSS Section 503 Concrete Structures

1.03 SUBMITTALS

A. General: Refer to Section 7.7 – Submittal Procedures, and Section 7.8 – Shop Drawings, Product Data, and Samples, for submittal requirements and procedures.

B. Shop Drawings:

1. Submit drawings that indicate the locations of all joints in concrete, including construction joints, expansion joints, isolation joints, and contraction joints. Coordinate with the requirements specified in Section 03 11 00 – Concrete Forming.

2. Submit drawings that indicate the concrete placement schedule, method, sequence, location, and boundaries. Include each type and class of concrete and quantity in cubic yards.

C. Product Data: Submit manufacturer's product data for epoxy adhesive.

1. Epoxy Adhesive
2. Vapor Barrier

D. Records and Reports: Report the location in the finished work of each mix design, and the start and completion times of placement for each batch of concrete placed, for each date concrete is placed.

1.04 QUALITY ASSURANCE

A. General: Refer to Section 7.10 – Quality Assurance, for quality assurance requirements and procedures.

B. Tolerances:

1. Formwork Tolerances: Comply with the requirements specified in Section 03 11 00 – Concrete Forming.
2. Concrete Tolerances: Comply with the requirements of ACI 301, as applicable. For items of work or parts of the structure not covered by ACI 301, comply with the requirements of ACI 117, as applicable.
3. Tolerances for Slabs and Flatwork: Comply with the requirements specified in Section 03 35 00 – Concrete Finishing.

C. Architectural Concrete: Where concrete is indicated as architectural concrete exposed to public view, such concrete shall be produced in accordance with applicable requirements of ACI 301 and ACI 303.1.

D. Cold Joints: Cold joints in concrete will not be permitted unless planned and treated properly as construction joints.

E. Monitoring of Formwork: Provide monitoring of forms and embedded items, to detect movement of forms and embedded items out of alignment from the pressure of concrete placement.

F. HART will inspect concrete placement to confirm that proper placing methods are being employed, and that special techniques are used in congested areas and around obstructions such as pipes and other embedded items. Check installation of embedded items for correct location and orientation during concrete placement.

G. Place concrete under HART's observation, with the Contractor's quality control representative present to document requirements and results of the placement.

1.05 DELIVERY, STORAGE, AND HANDLING

A. Delivering and placing of concrete in hot weather shall conform to HSS Subsection 503.03(F)(7) – Hot Weather Concreting, applicable requirements of ACI 305R, and Section 03 05 15 – Portland Cement Concrete.

B. Concrete shall be central-mixed concrete from a central batch plant, transported to the jobsite in a truck mixer, in accordance with the requirements specified in Section 03 05 15 – Portland Cement Concrete, and ASTM C94.

C. Transport concrete to the work site in a manner that will assure efficient delivery of concrete to the point of placement, without adversely altering specified properties with regard to water/cement ratio, slump, air entrainment, and homogeneity.

PART 2 – PRODUCTS

2.01 MATERIALS

A. Formwork: Conform to Section 03 11 00 – Concrete Forming.

B. Joint Fillers and Sealers: Conform to Section 03 15 00 – Concrete Accessories.

C. Waterstops: Conform to Section 03 15 13 – Waterstops.

D. Reinforcing Steel: Conform to Section 03 20 00 – Concrete Reinforcing.

E. Portland Cement Concrete: Conform to Section 03 05 15 – Portland Cement Concrete.

F. Epoxy Adhesive: ASTM C881, Type II for non-load-bearing concrete and Type V for load-bearing concrete, grade and class as determined by work conditions and requirements.

G. Vapor Barrier: ASTM E1745, Class A except as modified in Article 2.01G.1 herein, nylon- or polyester-cord-reinforced three-ply high density polyethylene sheet or one-ply extruded polyolefin sheet; 15 mil minimum thickness. Compliance to ASTM standards shall be confirmed by an independent testing agency.

1. Permeance Rating: ASTM E96, ASTM E154 not exceeding 0.03 gr/ft^2/hr.

PART 3 – EXECUTION

3.01 CONVEYING AND PLACING CONCRETE

A. General:

1. Inspect forms, earth-bearing surfaces, reinforcement, and embedded items. Place concrete on structure only after forms have been cleared of debris and HART has checked and accepted forms and reinforcing steel.

2. Prior to placement of concrete, the subgrade shall be in a firm, well-drained condition and of adequate and uniform load-bearing nature to support construction personnel, construction materials, construction equipment, and steel reinforcing mats without tracking, rutting, heaving, or settlement. All weak, soft, saturated, or otherwise unsuitable material shall be removed and replaced with structural backfill or lean concrete. Earth bottoms or bearing surfaces for footings and slabs shall be dampened, but not saturated or muddied, just before placing concrete.

B. Placement Standards: Conveying and placing of concrete shall conform to applicable requirements of ACI 301, ACI 302.1R, ACI 304R, and ACI 318.

C. Concrete Placement: Concrete shall be placed in accordance with HSS Subsection 503.03(F) – Placing Concrete.

D. Pumping:

1. Concrete may be placed by pumping, if the slump can be maintained within the stated maximum limit and if accepted in writing by HART for the location proposed.

2. Place concrete by pumping methods in adherence with applicable requirements of ACI 304R and ACI 304.2R.

3. Equipment for pumping shall be of a size and design that ensures a continuous flow of concrete at the delivery end without separation of materials. Concrete from the end of a hose shall have a free fall of less than 5 feet. Pump hoses shall be supported on horses or similar devices, so reinforcement or post-tensioning ducts or tendons are not moved from their original position.

4. Concrete mix shall be designed to the same requirements specified in Section 03 05 15 – Portland Cement Concrete, and may be altered for placement purposes with HART's prior approval.

3.02 PLACEMENT UNDER WATER

A. Placement Standards: Placing of concrete in or under water shall be in accordance with requirements of HSS Subsection 503.03(F)(6) – Depositing Concrete Underwater.

3.03 CONSOLIDATION

A. Consolidate and compact concrete thoroughly by mechanical vibration during placement, in accordance with HSS Subsection 503.03(F)(5) – Vibrating.

3.04 CONSTRUCTION JOINTS

A. Installation of construction joints shall be in accordance with HSS Subsection 503.03(G)(1) – Construction Joints. Construction joints will be permitted only where indicated or approved by HART.

B. Provide and prepare construction joints and install waterstops where applicable, in accordance with the applicable requirements of ACI 301 and ACI 304R and as specified in Section 03 11 00 – Concrete Forming.

C. In accordance with HSS Subsection 503.03(J) – Concrete Exposed to Sea Water, construction joints will not be allowed between levels of extreme low and high water. Between these levels, leave forms in place for at least 30 days.

D. Where bonding of the joint is required, provide epoxy adhesive hereinbefore specified and apply in accordance with ACI 503.2.

3.05 EXPANSION AND CONTRACTION JOINTS

A. In accordance with Section 03 11 00 – Concrete Forming, for slab screeds and formwork where expansion and contraction joints are indicated as architectural features (e.g., reveals or rustications).

B. In accordance with Section 03 15 00 – Concrete Accessories, for expansion joint filler material and joint sealing compound.

C. In accordance with Section 03 35 00 – Concrete Finishing, for finishing edges of expansion joints in slabs with curved edging tool.

3.06 CURING AND PROTECTION

A. Curing and Protection: In accordance with Section 03 35 00 – Concrete Finishing.

3.07 REPAIR OF SURFACE DEFECTS

A. Repair of Surface Defects: In accordance with Section 03 35 00 – Concrete Finishing.

3.08 VAPOR BARRIER

A. Vapor Barrier: Place, protect, and repair vapor barrier sheets according to ASTM E1643 and manufacturer's written instructions. The more stringent shall apply.

1. Use the greatest width and lengths practical to minimize lap joints. Lap joints a minimum of 12 inches. Seal lap joints and edges with tape or materials compatible with the vapor barrier. Remove and replace torn, punctured or damaged vapor barrier materials.

2. Turn vapor barrier up in slab edge joints at vertical surfaces.

3. Do not cut or puncture vapor barrier. No penetrations of the vapor barrier allowed except for reinforcing steel and permanent utilities. Seal all penetrations including pipes and reinforcing. Repair damage and reseal vapor barrier before placing concrete.

4. Do not leave the vapor barrier exposed to ultraviolet radiation for more than a few days prior to the concrete pour. Remove standing water from the vapor barrier prior top concrete pour.

3.09 CONCRETE SLABS ON GRADE

A. For interior areas, unless specified elsewhere, place concrete floor slabs directly over vapor barrier overlain atop granular fill-capillary barrier and reinforce slabs with #4 steel bars at 18 inches o.c. each way. Chair reinforcement to the level required within the slab as indicated on the Design Plans.

1. Place floor slabs in alternate panels, long strip pattern, and following construction or contraction joints. Narrow contraction/control joints shall be provided transverse to the length of the cast strips. There shall be an interval of at least 2 days between placing the initial panels and that of the adjacent ones.

2. Provide joint filler strip, between concrete slab and abutting vertical surfaces at locations indicated and as detailed.

B. For exterior areas, unless specified elsewhere, place concrete floor slabs directly over granular fill and reinforce slabs with synthetic fibers. Provide isolation and contraction joints where detailed and at intersections, corners and at abutments. Place contraction joints not more than 25 feet apart, unless detailed otherwise.

1. Finish concrete true to grade, section and cross slope for sloped or crowned walks at 1.5 percent (1 percent minimum and 2 percent maximum). Round edges to 1/8-inch radius, except saw-cut joints. Finish steps in connection with walks with same finish as walks.

2. Use “Salt Rock Finish” in areas designated on architectural drawings or schedules. Remove salt rock from surface of slabs with low pressure wash.

C. Pigmented Concrete Slab:

1. Place a test slab, as a sample for review by HART, for finish and consistency of color.

2. Secure approval from HART, in writing, before proceeding with pigmented concrete.

END OF SECTION

This page intentionally left blank.

SECTION 03 35 00

CONCRETE FINISHING

PART 1 – GENERAL

1.01 SUMMARY

A. Description: This Section includes specifications for the finishing and curing of formed and unformed concrete surfaces, including the repair of surface defects.

B. Section Includes:

1. Repair of Surface Defects
2. Finishing of Formed Surfaces
3. Slabs and Flatwork
4. Curing
5. Protection
6. Tolerances

C. Related Sections:

1. Section 03 11 00 – Concrete Forming
2. Section 03 30 00 – Cast-In-Place Concrete

1.02 REFERENCES

A. American Association of State Highway and Transportation Officials (AASHTO):

1. AASHTO M182 — Standard Specification for Burlap Cloth Made from Jute or Kenaf and Cotton Mats

B. American Concrete Institute (ACI):

1. ACI 117 — Standard Specification for Tolerances for Concrete Construction and Materials
2. ACI 301 — Standard Specifications for Structural Concrete
3. ACI 308 — Standard Practice for Curing Concrete
4. ACI 503.4 — Standard Specification for Repairing Concrete with Epoxy Mortars

C. ASTM International (ASTM):

1. ASTM C33 — Standard Specification for Concrete Aggregates
2. ASTM C881 — Standard Specification for Epoxy-Resin-Base Bonding Systems for Concrete

3. ASTM E1155 Standard Test Method for Determining FF Floor Flatness and FL Floor Levelness Numbers

D. State of Hawaii Department of Transportation Standard Specifications (HSS):

1. HSS Section 503 Concrete Structures

2. HSS Section 711 Concrete Curing Materials and Admixtures

1.03 SUBMITTALS

A. General: Refer to Section 7.7 – Submittal Procedures and Section 7.8 – Shop Drawings, Product Data, and Samples, for submittal requirements and procedures. Submittals involving exposed concrete finishes require approval of HART before they may be incorporated in the Work.

B. Shop Drawings: Submit drawings or diagrams to scale that indicate the location in plan and elevation of all concrete finishes.

C. Product Data: Submit manufacturers' product data for manufactured products specified and indicated.

D. Samples:

1. Submit 1/2-pint sample container of aluminum oxide and silicon carbide abrasive grit for review and acceptance where "non-slip finish" is indicated.

2. Submit samples not less than 12 inches by 12 inches in size of each type of sand blast finish, indicating materials and methods used to produce the sand blast finishes. HART's review will be for color and texture only. Approved samples will become HART's control samples.

1.04 QUALITY ASSURANCE

A. General: Refer to Section 7.10 – Quality Assurance, for quality assurance requirements and procedures.

B. Finishes:

1. Finishing of formed concrete surfaces shall conform to applicable requirements of ACI 301.

2. Finishes for slabs and flatwork shall conform to applicable requirements of ACI 301.

3. Special architectural finishes for formed concrete surfaces shall conform to applicable requirements of ACI 301.

C. Curing: Conform to requirements of ACI 301 and ACI 308, as applicable, and requirements specified herein.

D. Site Mock-Ups: Provide a minimum of five site mock-ups, at least 3 feet by 4 feet in size, of finishes of formed surfaces in exposed locations and of exposed slab finishes for HART's review and approval. A minimum of two samples from each casting process will be selected by HART to establish control samples that illustrate a range of color or shade and texture that will be deemed acceptable. Mock-ups shall be finished as stipulated in these specifications.

PART 2 – PRODUCTS

2.01 TOOLS AND EQUIPMENT

A. Furnish all materials, tools, equipment, facilities, and services required to perform the required concrete finishing work.

2.02 REPAIR AND FINISHING MATERIALS

A. Portland Cement: Use same cement in the concrete work, in accordance with Section 03 05 15 – Portland Cement Concrete.

B. Aggregate:

1. For Bonding Grout: ASTM C33, washed, clean sand passing a No. 30 sieve.

2. For Patching Mortar: ASTM C33, washed, clean, graded fine aggregate of suitable size for areas to be repaired. Clean coarse aggregate up to Size No. 8 may be added for repair of larger pockets and voids.

C. Commercial Patching Mortar: A structural repair mortar may be furnished if appropriate and approved by HART.

D. Epoxy Patching Mortar: As specified in ACI 503.4 for epoxy mortar.

E. Epoxy Adhesive: ASTM C881, Type II or Type V, epoxy-based bonding agent.

F. Anti-Slip Abrasive Grit: Virgin grain aluminum oxide or silicon carbide particles, or a mixture of the two.

2.03 CURING MATERIALS

A. Damp Curing Materials:

1. Waterproof Sheet Materials: Shall conform to HSS Subsection 711.01 – Curing Materials and ASTM M171.

2. Burlap: Shall conform to HSS Subsection 711.01 – Curing Materials and AASHTO M182, of class or weight suitable for the use and location. Do not use burlap where concrete is exposed to direct sunlight.

B. Curing Compound:

1. Liquid membrane-forming compound (excluding bridge deck) shall conform to HSS Subsection 711.01 – Curing Materials and AASHTO M148.

2. Liquid membrane-forming compound (bridge decks only) shall conform to HSS Subsection 711.01 – Curing Materials and AASHTO M148, Type 2.

PART 3 – EXECUTION

3.01 REPAIR OF SURFACE DEFECTS

A. Repair Standards: Repair surface defects in accordance with applicable requirements of ACI 301. When using epoxy mortar, adhere to applicable requirements of ACI 503.4.

B. Surface Defects:

1. Repair of surface defects shall begin immediately after form removal. For repair with epoxy mortar, concrete shall be dry.

2. Surface defects are defined to include the following: form-tie holes, air voids or pockets, bug holes with a nominal diameter or depth greater than 1/4 inch, honeycombed areas, rock pockets, visible construction joints, fins, and burrs.

3. Repair of surface defects shall be tightly bonded and shall result in concrete surfaces of uniform color and texture, matching adjacent surfaces, and free of shrinkage cracks.

C. Repair Work:

1. Remove honeycombed and other defective concrete down to sound concrete. Saw-cut the edges perpendicular to the surface or slightly undercut. Feather edges will not be permitted. Dampen the area to be patched and an area at least 6 inches wide surrounding it, to prevent absorption of water from the patching mortar.

2. Where rock pockets or similar defects or voids expose steel reinforcement, cut out to solid surface behind the reinforcing steel to provide suitable key-lock for patching mortar. Patching mortar shall envelope the exposed reinforcing bar.

3. Bond patching mortar to concrete with bonding grout or epoxy adhesive. Bonding grout shall consist of one part portland cement to one part No. 30 mesh sand, mixed to the consistency of a thick cream, and then well brushed onto the concrete. Bond commercial patching mortar to concrete in accordance with manufacturer's instructions.

4. Make the patching mortar of the same materials and of approximately the same proportions as used for the concrete, except omit the coarse aggregate. Use not more than one part portland cement to 2-1/2 parts sand by damp loose volume, and substitute white portland cement for a portion of the regular gray portland cement, to produce patching mix matching the surrounding concrete in color when dry. Determine the proportion of white portland cement by trial mixes and test areas prior to repair of actual defective areas.

5. After surface water has evaporated from area to be patched, brush the bond coat well into surface. When bond coat begins to lose water sheen, apply patching mortar. Compact the mortar into place and strike off the patch is left slightly higher than the surrounding surface. To permit initial shrinkage, leave the patch undisturbed for at least 1 hour before being finally finished. Keep the patched area damp for 7 days.

6. Neatly finish patched surfaces to match adjacent surrounding surface texture of concrete. Grind or fill surfaces to produce level, plumb, true planes.

7. For walls exposed in the finish work, form-tie holes shall be patched and finished flush with adjacent surface. For holes passing entirely through walls, a plunger-type injection gun or other suitable device shall be used to completely fill holes.

8. Patching of honeycombed areas or rock pockets that are too large and unsatisfactory for mortar patching shall be cut out to solid surface, keyed, and packed solid with matching concrete to produce firm bond and flush surface. Patching shall match texture of adjacent surfaces where exposed in the finished work.

9. In exposed locations, repair work that does not match the texture and color of surrounding adjacent surfaces or was not well performed shall be removed and performed again, until repair work conforms to the requirements of these Specifications.

10. Surfaces to receive membrane waterproofing shall have fins and loose material removed, and voids and cracks patched flush with adjacent surfaces.

11. Completed repairs shall be cured as specified in Article 3.04 herein.

3.02 FINISHING OF FORMED SURFACES

A. Unexposed Surfaces:

1. Concrete that will not be exposed in the completed structure shall be any form finish, as specified in Section 03 11 00 – Concrete Forming, and ACI 301 for "rough form finish."

2. Concrete to receive membrane waterproofing shall receive a "smooth form finish" in accordance with ACI 301.

B. Exposed Surfaces: Unless indicated otherwise, concrete that will be exposed in the completed structure shall receive the following finishes:

1. Smooth Form Finish: Conform to ACI 301. Finish texture of adjacent castings shall match such that variation in texture is not discernable.

2. Smooth Rubbed Finish: Conform to ACI 301.

3. Grout Cleaned Finish: Conform to ACI 301.

4. Unspecified Finish: When finish is not indicated, provide "smooth form finish" as specified in Article 3.02B.1 herein.

C. Sand Blast Finish:

1. Blasting Operations and Requirements:
   a. Apply sandblasted finish to exposed concrete surfaces where indicated.
   b. Perform sand blasting at least 72 hours after placement of concrete. Coordinate with formwork construction, concrete placement schedule, and formwork removal to ensure that surfaces to be blast finished are blasted at the same age for uniform results.
   c. Determine type of nozzle, nozzle pressure, and blasting techniques required to match HART's control samples.
   d. Abrasive-blast corners and edges of patterns carefully, using back-up boards, to maintain uniform corner or edge line.

2. Depths of Cut: Use an abrasive grit of the proper type and gradation to expose aggregate and surrounding matrix surface, to match HART's control samples as follows:
   a. Brush Sand Blast Finish: Remove cement matrix to expose face of fine aggregate; no reveal.
   b. Light Sand Blast Finish: Expose fine aggregate with occasional exposure of coarse aggregate; maximum 1/16-inch reveal.

c. Medium Sand Blast Finish: Generally expose coarse aggregate; 3/16-inch to 1/4-inch reveal.

3. Surface Continuity: Perform sand blast finishing in as continuous an operation as possible, utilizing the same work crew to maintain continuity of finish on each surface or area of work. Maintain patterns of variances in depths of cuts as indicated.

4. Construction Joints: Use technique acceptable to HART to achieve uniform treatment of construction joints.

5. Protection and Repair:

   a. Protect adjacent materials and finishes from dust, dirt, and other surface or physical damage during abrasive-blast finishing operations. Provide protection as required and remove from site at completion of the work.

   b. Repair or replace other work damaged by finishing operations.

6. Clean-Up: Maintain control of concrete chips, dust, and debris in each work area. Clean up and remove such material at the completion of each day of operation. Prevent migration of airborne materials by use of tarpaulins, wind breaks, and similar containing devices.

3.03 SLABS AND FLATWORK

A. Placement and Finishing Standards: Slabs and flatwork shall be placed, consolidated, and finished in accordance with applicable requirements of ACI 301. Coordinate with Section 03 30 00 – Cast-In-Place Concrete, as applicable.

B. Placement:

1. Slabs and flatwork shall be placed and finished monolithically. Strike off and screed slabs to true, plane surfaces at required elevations, and thoroughly compact concrete with vibrators, floats, and tampers to force coarse aggregate below the surface. Finish slab within 4 hours of concrete placement.

2. Whether indicated or not, in areas where drains occur, slope finished slab to drains. Slopes shall be a minimum of 1/8 inch per foot unless otherwise indicated.

C. Slab Finishes: Unless indicated otherwise, slabs and flatwork shall receive the following finishes:

1. Scratched Finish: Provide “scratched finish” for slab substrates to receive cementitious toppings or finishes (e.g., terrazzo or mortar setting bed for ceramic tile) in accordance with ACI 301.

2. Floated Finish: Provide “floated finish” for track slabs and mud slabs, and for slabs and flatwork to receive roofing and membrane waterproofing in accordance with ACI 301.

3. Troweled Finish: Provide “troweled finish” for interior slabs and flatwork to be exposed in the completed structure, for slabs to receive resilient floor coverings, and for flatwork to receive elastomeric bearing pads in accordance with ACI 301.

4. Broom Finish: Exact texture and coarseness of the broom finish shall match the approved site mock-up. Provide fine or medium-coarse “broom finish” as indicated

for exterior sidewalks and paving, exterior ramps, equipment, and transformer pads in accordance with ACI 301.

5. Non-Slip Finish: Non-slip materials shall be aluminum oxide and silicone carbide grit particles. Provide "non-slip finish" for interior pedestrian ramps, stair treads and landings, walkways, and other floor areas where indicated in accordance with ACI 301.

6. Swirl-Pattern Finish: Provide for garage floors. After basic floating operations have been completed, hand-float slabs using wood float to produce a continuous swirl-patterned surface, free from porous spots, irregularities, depressions, and small pockets or rough spots such as may be caused by accidentally disturbing particles of coarse aggregate embedded near surface. Use natural arm circular motion to produce rows of approximately 1-foot-radius swirl pattern, covering approximately half of the preceding row with each successive row.

7. Unspecified Finish: When finish is not indicated or specified, provide finishes as specified in ACI 301.

D. Surface Tolerances:

1. Flat Tolerance: Slabs and flatwork with "troweled finish" and "non-slip finish."

2. Straightedge Tolerance: Slabs and flatwork with fine "broom finish" or medium-coarse "broom finish."

3. Bullfloated Tolerance: Slabs and flatwork with "scratched finish," "floated finish," and coarse "broom finish."

E. Joints:

1. Construction, expansion, isolation, and contraction joints shall be located as indicated. Construction joints shall act as contraction joints. Where additional contraction joints are required to prevent shrinkage cracks, saw-cut such joints. All joints shall be straight and true to line.

2. Mark-off lines or edges at formed construction and expansion joints shall be finished with 1/4-inch-radius curved edging tool, neat and true to line, uniform throughout.

3.04 CURING

A. Curing Standards: Cure concrete in accordance with applicable requirements of ACI 301 and ACI 308, except:

1. Curing Period: In accordance with HSS Subsection 503.03(K) – Protection and Curing, for minimum curing period.

2. Curing Methods: Cure concrete by water curing, impervious membrane curing, or forms-in-place curing in accordance with HSS Subsection 503.03(L) – Curing Methods.

3. Curing Requirements:

a. Concrete structures other than decks shall be cured by water curing, impervious membrane curing, or forms-in-place curing in accordance with HSS Subsection 503.03(L) – Curing Methods.

b. Concrete surface with Class 2 finish shall be cured by water curing or forms-in-place curing in accordance with HSS Subsection 503.03(L) – Curing Methods.

c. Concrete decks shall be cured using a combination of water curing and impervious membrane curing, in accordance with HSS Subsection 503.03(L) – Curing Methods.

B. Curing Compound: Application of curing compound shall be in accordance with applicable requirements of ACI 308.

3.05 PROTECTION

A. Protect concrete in accordance with HSS Subsection 503.03(K) – Protection and Curing.

3.06 TOLERANCES

A. Formed Surfaces: Adhere to the applicable requirements of ACI 301. For parts of the structure not covered by ACI 301, conform to applicable requirements of ACI 117.

B. Slabs and Flatwork: Adhere to applicable classification requirements of ASTM E1155, as follows:

1. Very Flat Tolerance: F_F 50, F_L30. True plane with maximum variation of 1/8 inch in 10 feet, when measured with a 10-foot straightedge placed anywhere on the slab in any direction.

2. Flat Tolerance: F_F 30, F_L20. True plane with maximum variation of 3/16 inch in 10 feet, when measured with a 10-foot straightedge placed anywhere on the slab in any direction.

3. Straightedge Tolerance: F_F 20, F_L 15. True plane with maximum variation of 5/16 inch in 10 feet, when measured with a 10-foot straightedge placed anywhere on the slab in any direction.

4. Bullfloated Tolerance: F_F 15, F_L 13. True plane with maximum variation of 1/2 inch in 10 feet, when measured with a 10-foot straightedge placed anywhere on the slab in any direction.

END OF SECTION

SECTION 03 40 00
PRECAST CONCRETE

PART 1 – GENERAL

1.01 SUMMARY

A. Description: This Section includes fabrication of precast concrete members, components, and structures; erection of precast concrete members, components, and structures; and precast concrete structures for utilities.

B. Section Includes:

1. Examination
2. Erection/Installation

C. Related Sections:

1. Section 03 05 15 – Portland Cement Concrete
2. Section 03 20 00 – Concrete Reinforcing
3. Section 03 35 00 – Concrete Finishing

1.02 REFERENCES

A. American Concrete Institute (ACI):

1. ACI 301 — Specifications for Structural Concrete
2. ACI 318 — Building Code Requirements for Structural Concrete

B. ASTM International (ASTM):

1. ASTM A123 — Standard Specification for Zinc (Hot-Dip Galvanized) Coatings on Iron and Steel Products
2. ASTM A153 — Standard Specification for Zinc Coating (Hot-Dip) on Iron and Steel Hardware
3. ASTM C494 — Specification for Chemical Admixtures for Concrete
4. ASTM C618 — Standard Specification for Coal Fly Ash and Raw or Calcinated Natural Pozzolan for Use in Concrete
5. ASTM C1017 — Standard Specification for Chemical Admixtures for Use in Producing Flowing Concrete

C. American Welding Society (AWS):

1. AWS D1.1 — Structural Welding Code – Steel
2. AWS D1.4 — Structural Welding Code – Reinforcing Steel

D. Precast/Prestressed Concrete Institute (PCI):

1. PCI MNL-117 Manual for Quality Control for Plants and Production of Architectural Precast Concrete Products

2. PCI MNL-122 Architectural Precast Concrete

1.03 SUBMITTALS

A. General: Refer to Section 7.7 – Submittal Procedures, and Section 7.8 – Shop Drawings, Product Data, and Samples, for submittal requirements and procedures.

B. Shop Drawings: Submit shop drawings showing the following:

1. Detailed drawings of panels, members, and components, showing dimensions and sections of each.

2. Quantities, dimensions, and locations of sleeves, anchors, brackets, inserts, reglets, reinforcing steel, lift devices, accessories, and methods of securing same in forms.

3. Casting, consolidating, and finishing procedures.

C. Product Data: Submit manufacturer's product data of manufactured products and accessories. Include manufacturer's detailed drawings and dimensions when applicable.

D. Samples: Samples require HART's approval as follows:

1. For precast concrete to be exposed in the finished work to public view, submit form facing material, 12 inches by 12 inches or larger in size, as appropriate.

2. For precast concrete to receive sandblasted or other surface finish, submit sample of concrete with specified finish, 12 inches by 12 inches or larger in size, as appropriate.

E. Quality Plan: In compliance with the applicable General Conditions requirements, provide a Quality Control Plan to ensure uniformity of materials, conformance with accepted mix designs, and compliance with these Specifications.

F. Certificates:

1. Submit evidence of current plant certification under the Precast/Prestressed Concrete Institute (PCI) Plant Certification Program.

2. Submit manufacturers' certifications of compliance for materials as required by PCI MNL-117.

3. For welders, furnish welding certificates or affidavits attesting to the welders' qualifications to perform the indicated and specified welding.

1.04 QUALITY ASSURANCE

A. General: Refer to Section 7.10 – Quality Assurance, for quality assurance requirements and procedures.

B. Qualifications of Fabricator:

1. The fabricator of precast concrete products shall be an active and approved participant in the PCI Plant Certification Program.

2. Precast concrete work shall be produced in a plant or production facility by a fabricator who has been regularly and continuously engaged in the manufacture of precast concrete products.

3. The fabricator shall have sufficient production capacity to produce the required units without causing a delay in the Work.

C. Qualifications of Welders: Welders shall be prequalified in accordance with AWS D1.1 or AWS D1.4, as applicable to the Work.

D. Tolerances: Fabricate and erect precast concrete members within the tolerances recommended in PCI MNL-117.

E. Mock-Ups: At the casting plant, construct a minimum of five sample panels or units of the actual item or section of item, not less than 10 square feet in surface 3 feet by 4 feet in size, that shows the features, finish, and color of concrete surfaces exposed to public view. A minimum of two samples of the mock-up will be selected by HART as control samples to establish a range of color or shade and texture that will be acceptable. The mock-ups shall be submitted for review and acceptance by HART prior to starting production.

F. Control Samples: All finishes and colors shall match HART's control samples. Control samples require HART's approval before they may be used as a standard.

1.05 DELIVERY, STORAGE, AND HANDLING

A. Transport, handle, and store units in a manner that will prevent damage to the members.

B. If storage of precast units at the site is necessary, store units in a manner that will prevent cracking, distortion, staining, or other damage. Support members at their respective designed bearing support points.

C. Prior to shipment, thoroughly clean all surfaces exposed to public view and the faces of all joints of laitance, bond-breaking compound, and other foreign material by light sand blasting. Upon arrival at the delivery site, HART will inspect each unit. If in HART's opinion, damage has occurred during shipment that will impair the structural function of the unit, the unit will be rejected. Replace a rejected unit with an approved unit at no cost to HART. Repair non-structural surface defects in accordance with Section 03 35 00 CONCRETE FINISHING. Surfaces exposed to public view sustaining damage to a contiguous area of more than 25 square feet or more than 25% of the exposed surface, whichever is less, shall be repaired by a method approved by HART. If the damage cannot be repaired to HART's satisfaction, the unit will be rejected. Replace a rejected unit with an approved unit at no cost to HART.

PART 2 – PRODUCTS

2.01 MATERIALS

A. Reinforcing Steel: Comply with applicable requirements of Section 03 20 00 – Concrete Reinforcing.

B. Portland Cement Concrete:

1. Comply with applicable requirements of Section 03 05 15 – Portland Cement Concrete. Provide class of concrete as indicated.

2. When a dense, high-strength concrete is required as for stair treads, a fly ash or pozzolanic admixture (ASTM C618) not to exceed 10 percent of the weight of the cement may be introduced in the mix, along with the required plasticizer (ASTM C1017) or water-reducing admixtures (ASTM C494, Type F or Type G).

C. Anchors, Lift Devices, and Accessories: Provide concrete inserts, reglets, anchors, brackets, and fasteners as indicated or required for fabrication and installation work. All items shall be zinc-coated or galvanized in accordance with ASTM A153 or ASTM A123, as applicable. Select the lift devices and be responsible for their performance and damage resulting from the use of faulty or inferior devices. Lift devices shall not be visible on exposed faces of precast members.

2.02 FABRICATION

A. Requirements and Standards:

1. Manufacture precast concrete units in accordance with PCI MNL-117, PCI MNL-122 and applicable requirements of ACI 318/318R, Section 16.

2. Forms shall be accurately constructed to produce members to the dimension, shape, configuration, and profile indicated. When not otherwise indicated, construct forms to produce smooth concrete.

3. Concrete reinforcement, lifting reinforcement, and concrete inserts and anchorage devices shall be placed and secured against movement as required.

4. Concrete shall be placed and consolidated to the shape, configuration, and dimensions indicated.

5. Members shall be moist cured in conformance with curing requirements specified in PCI MNL-117. Minimum curing period for combined initial curing and secondary curing shall be seven days or until the specified strength of concrete is attained.

B. Finishes:

1. Provide finishes for exposed concrete matching approved samples and mock-ups and the approved control samples.

2. When sandblasted finish is indicated, provide “sandblast finish” as specified in ACI 301. Degree of sandblasting shall be as required to provide surface finish matching the approved control sample.

3. For items not exposed to public view, provide “smooth form finish” as specified in Section 03 35 00 – Concrete Finishing.

C. Markings: Provide permanent markings in precast units to identify pick-up points and orientation in the structure, conforming to the markings indicated on shop drawings. Imprint the date of casting on each precast unit where it will not show in the finished structure.

2.03 QUALITY CONTROL

A. In accordance with General Conditions requirements, a Contractor-employed independent testing laboratory or agency shall perform the inspections and tests required to verify compliance with these Specifications. All such inspections and tests shall be conducted at no additional cost to HART.

B. Concrete shall be tested for compressive strength as specified in Section 03 05 15 – Portland Cement Concrete.

PART 3 – EXECUTION

3.01 EXAMINATION

A. Examine all parts of the supporting structure and the conditions under which the precast concrete units are to be erected and installed. Verify the locations of anchors to pre-determine the accuracy of the installation of each member.

3.02 ERECTION/INSTALLATION

A. Transport and erect precast concrete units in accordance with PCI MNL-117 and as specified herein.

B. Erect precast concrete units and accurately install in place with mechanical hoisting equipment more than adequate for the loads.

C. Maintain precast concrete unit in upright position at all times. Handle unit only by indicated lifting devices or cushioned pads, and in a manner that will not overstress or damage the unit.

D. Erect precast concrete units in accordance with indicated erection tolerances. Comply with erection sequences indicated. Position units to avoid eccentric application of forces, and make complete and uniform contact with bearing surfaces.

E. Provide anchorage and attachment welding and bolting, as indicated, in accordance with PCI MNL-117, Division VI.

F. At completion, units shall be plumb, level, and square, true to line, with angles and edges parallel with related building lines.

END OF SECTION

This page intentionally left blank.

SECTION 03 60 00
GROUTING

PART 1 – GENERAL

1.01 SUMMARY

A. Description: This Section includes furnishing, mixing, and placing non-shrink, non-metallic, non-corrosive cementitious grout for structural columns, base plates, and equipment bases as indicated. Furnish, mix, and place non-shrink, non-metallic, non-corrosive epoxy grout.

B. Section Includes:

1. Preparation
2. Installation
3. Curing

C. Related Sections:

1. Section 03 05 15 – Portland Cement Concrete
2. Section 03 30 00 – Cast-In-Place Concrete
3. Section 03 35 00 – Concrete Finishing

1.02 REFERENCES

A. American Concrete Institute (ACI):

1.	ACI 503.2	Specification for Bonding Plastic Concrete to Hardened Concrete with a Multi-Component Epoxy Adhesive

B. ASTM International (ASTM):

1.	ASTM C109	Standard Test Method for Compressive Strength of Hydraulic Cement Mortars (Using 2-in. or [50-mm] Cube Specimens)
2.	ASTM C157	Standard Test Method for Length Change of Hardened Hydraulic Cement Mortar and Concrete
3.	ASTM C307	Standard Test Method for Tensile Strength of Chemical-Resistant Mortar, Grouts, and Monolithic Surfacings
4.	ASTM C531	Standard Test Method for Linear Shrinkage and Coefficient of Thermal Expansion of Chemical-Resistant Mortars, Grouts, Monolithic Surfacings, and Polymer Concretes
5.	ASTM C579	Standard Test Methods for Compressive Strength of Chemical-Resistant Mortars, Grouts, Monolithic Surfacings, and Polymer Concretes

6. ASTM C580 — Standard Test Method for Flexural Strength and Modulus of Elasticity of Chemical-Resistant Mortars, Grouts, Monolithic Surfacings, and Polymer Concretes
7. ASTM C827 — Standard Test Method for Change in Height at Early Ages of Cylindrical Specimens of Cementitious Mixtures
8. ASTM C881 — Standard Specification for Epoxy-Resin-Base Bonding Systems for Concrete
9. ASTM C882 — Standard Test Method for Bond Strength of Epoxy-Resin Systems Used With Concrete By Slant Shear
10. ASTM C884 — Standard Test Method for Thermal Compatibility Between Concrete and an Epoxy-Resin Overlay
11. ASTM C1090 — Standard Test Method for Measuring Changes in Height of Cylindrical Specimens of Hydraulic-Cement Grout
12. ASTM C1107 — Standard Specification for Packaged Dry, Hydraulic-Cement Grout (Nonshrink)
13. ASTM C1339 — Standard Test Method for Flowability and Bearing Area of Chemical-Resistant Polymer Machinery Grouts
14. ASTM D2471 — Standard Test Method for Gel Time and Peak Exothermic Temperature of Reacting Thermosetting Resins

C. State of Hawaii Department of Transportation Standard Specifications (HSS):

1. HSS Section 712 — Miscellaneous

D. United States Army Corps of Engineers:

1. CRD-C620 — Standard Method of Sampling Fresh Grout
2. CRD-C621 — Corps of Engineers Specification for Non-shrink Grout

1.03 SUBMITTALS

A. General: Refer to Section 7.7 – Submittal Procedures, and Section 7.8 – Shop Drawings, Product Data, and Samples for submittal requirements and procedures.

B. Product Data: Submit manufacturer's product data and installation instructions.

1. Certification: Submit certificates of compliance or laboratory test reports affirming that the proposed material conforms to requirements of this Section.

1.04 QUALITY ASSURANCE

A. General: Refer to Section 7.10 – Quality Assurance, for quality assurance requirements and procedures.

1.05 ENVIRONMENTAL CONDITIONS

A. Handle grout the same as concrete with regard to temperature and curing, as specified in Section 03 30 00 – Cast-In-Place Concrete, Section 03 05 15 – Portland Cement Concrete, and Section 03 35 00 – Concrete Finishing.

B. Cementitious Grout: For slump of 4 inches, grout shall be mixed at a rate of 1/2 to 3/4 gallon of water per 50-pound bag of cement. Water content of grout shall be adjusted to suit field conditions.

PART 2 – PRODUCTS

2.01 MATERIALS

A. Cementitious Grout: Provide non-shrink, non-metallic, non-corrosive, cement-based grout conforming to the following requirements:

1. Applicable Standards: ASTM C1107 and CRD-C621.
2. Grout shall have portland cement base, expansive agent, and carefully graded silica sand and shall be packaged in 50-pound multi-wall bags with polyethylene liners.
3. Expansion at 28 Days: 0.0002 percent confirming to HSS Table 712.04-1 – "Grout Characteristics."
4. Compressive Strength: Conform to HSS Table 712.04-2 – "Compressive Strength Requirements."
5. Yield, Initial Set, Final Set, and Work Time: Conform to HSS Table 712.04-1 – "Grout Characteristics."
6. Provide non-sag trowelability or flowability as necessary for the particular application.

B. Water: Conform to HSS Subsection 712.01 – Water.

C. Epoxy Grout: Provide a three-component epoxy grouting system consisting of resin, hardener, and aggregate that conforms to the requirements listed herein. These epoxy materials are to be used in precast concrete segmental construction to repair holes and block outs, protect the anchorages of post-tensioning tendons or bars, and other uses indicated in the plans. The material shall produce a low exothermic reaction and have flow and fill characteristics suitable for machine base plate applications. The material will be extended with the aggregate supplied by the manufacturer. Mix with the full aggregate loading unless the use of less aggregate is approved by HART. The material shall be factory pre-proportioned including factory supplied aggregate. Deliver products in original containers with manufacturer's name, date of manufacture, product identification label and batch numbers. Materials must be within the manufacturer's recommended shelf life. Store and condition the product in full compliance with manufacturer's recommendations.

D. Epoxy Adhesive: ASTM C881, Type IV, Grade 2, Class C. Low-viscosity epoxy grout for deep vertical dowel application will be allowed.

2.02 MIX DESIGN

A. Mix grout ingredients for both cementitious grout and epoxy grout in accordance with the respective manufacturer's mixing instructions and recommendations. Mix grout materials in proper mechanical mixers.

B. Mix grout as close to work area as possible.

2.03 SOURCE QUALITY CONTROL

A. Inspections and Tests: Perform visual inspections and shrinkage tests using an approved independent test laboratory, and strength tests as necessary to verify performance requirements of grout. Sampling and testing of grout shall conform to applicable ASTM or CRD-620 requirements.

B. Cementitious Grout: Grout shall meet the following performance requirements:

1. Expansion: Grout shall exhibit no displacement when tested in accordance with ASTM C157.

2. Shrinkage: Grout shall exhibit no displacement when tested in accordance with ASTM C827 and ASTM C1090. There shall be no vertical volume shrinkage of grout in the plastic or hardened stage at any time.

3. Compressive Strength: To be tested in accordance with ASTM C109.

C. Epoxy Grout: Grout shall meet the following performance requirements:

1. Coefficient of Thermal Expansion: Maximum expansion from 74 degrees Fahrenheit to 210 degrees Fahrenheit less than 20 x 10-6 in/in/degrees Fahrenheit when tested in accordance with ASTM C531.

2. Linear Shrinkage: Maximum of 0.025-percent at 7 days when tested in accordance with ASTM C531.

3. Flowability and Effective Bearing Area (EBA): 90 percent minimum coverage of the tested base plate when tested in accordance with ASTM C1339.

4. Compressive Strength: Minimum strength greater than or equal to 10,000 psi after 7 day cure at 77 degrees Fahrenheit when tested in accordance with ASTM C579 Method B.

5. Tensile Strength: Minimum strength greater than or equal to 2,100 psi after 7 day cure at 77 degrees Fahrenheit when tested in accordance with ASTM C307.

6. Flexural Strength: Minimum strength greater than or equal to 3,600 psi after 7 day cure at 77 degrees Fahrenheit when tested in accordance with ASTM C580.

7. Modulus of Elasticity: Modulus less than 2,100,000 psi after 7 day cure at 77 degrees Fahrenheit when tested in accordance with ASTM C580.

8. Peak Exotherm: Less than 150 degrees Fahrenheit for a 12 x 12 x 3 in. specimen when tested in accordance with ASTM D2471.

9. Slant Shear: Minimum strength greater than or equal to 3,000 psi at 7 days when tested in accordance with ASTM C882.

10. Thermal Compatibility: Five cycles passed when tested in accordance with ASTM C884.

11. Gel Time: Less than four hours when tested in accordance with ASTM D2471.

PART 3 – EXECUTION

3.01 PREPARATION

A. Concrete surfaces to receive grout shall be prepared by chipping, sandblasting, water blasting, or other accepted methods to remove defective concrete, laitance, dirt, oil, grease, and other foreign matter to achieve sound, clean, and roughened concrete surfaces.

B. Cover concrete areas with protective waterproof covering until ready to place grout.

C. Remove foreign matter from steel surfaces to be in contact with grout. Clean contact steel surfaces as necessary by wire brushing and wiping dust clean.

D. Align and level components to be grouted, and maintain in final position until grout placement is complete and accepted.

E. Install forms for grout about the columns and other spaces to be grouted. The tops of such forms shall be 1 inch above the surfaces to be grouted.

F. Remove protective waterproof covering and clean contaminated surfaces immediately before grouting.

G. Provide air-relief holes in large baseplates and in baseplates where obstructions underneath may cause air entrapment.

H. Saturate concrete surfaces with clean water and remove excess water immediately before grouting.

I. Where necessary or appropriate for better bond, epoxy adhesive may be applied to clean, dry substrate surfaces in accordance with applicable requirements of ACI 503.2.

3.02 INSTALLATION

A. Place grout in accordance with the respective manufacturer's instructions and recommendations. Pour grout from one side only until grout rises at least 1 inch above the plate on the opposite side of said plate. Strapping and plunging or another recommended method may be used to force grout to flow under the entire area.

B. Neatly trowel edges of grout base, tapered at an angle of 60 degrees when measured from the horizontal, or as indicated.

C. Do not remove leveling shims for at least 48 hours after grout has been placed.

D. After shims have been removed (if used), fill voids with grout, packing the material with a suitable tool.

E. Do not use grout that has begun to set or if more than 1 hour has elapsed after initial mixing.

F. Additional and supplemental requirements for epoxy grout shall be in accordance with Section 03 05 18 – Prestressed Concrete.

3.03 CURING

A. Cementitious grout shall be cured the same as specified for concrete in Section 03 35 00 – Concrete Finishing.

B. Epoxy grout shall be cured as recommended by the grout manufacturer.

END OF SECTION

SECTION 05 05 23
METAL FASTENINGS

PART 1 – GENERAL

1.01 SUMMARY

A. Description: This Section includes the Work for Metal Fastenings of structural steel and miscellaneous metalwork, including sheet steel, as indicated. This Section also includes qualification of welders and welding procedures, inspections, and tests of welds.

B. Section Includes:

1. Field Quality Control

1.02 REFERENCES

A. American Society for Nondestructive Testing (ASNT):

1. Recommended Practice No. SNT-TC-1A

B. ASTM International (ASTM):

1.	ASTM E94	Standard Guide for Radiographic Examination
2.	ASTM E164	Standard Practice for Contact Ultrasonic Testing of Weldments
3.	ASTM E165	Standard Test Method for Liquid Penetrant Examination
4.	ASTM E709	Standard Guide for Magnetic Particle Testing
5.	ASTM E1032	Standard Test Method for Radiographic Examination of Weldments

C. American Welding Society (AWS):

1.	ANSI/AWS A2.4	Standard Symbols for Welding, Brazing, and Nondestructive Examination
2.	ANSI/AWS A3.0	Standard Welding Terms and Definitions
3.	ANSI/AWS A5.01	Procurement Guidelines for Consumables – Welding and Allied Processes – Flux and Gas Shielded Electrical Welding Processes
4.	ANSI/AWS B1.10	Guide for the Nondestructive Examination of Welds
5.	ANSI/AWS D1.1	Structural Welding Code – Steel
6.	ANSI/AWS D1.3	Structural Welding Code – Sheet Steel
7.	ANSI/AWS QC1	Standard for AWS Certification of Welding Inspectors

1.03 SUBMITTALS

A. General: Refer to Section 7.7 – Submittal Procedures, and Section 7.8 – Shop Drawings, Product Data, and Samples, for submittal requirements and procedures. For shop drawings and other submittals, employ the standard welding symbols of AWS A2.4 and the standard welding terms of AWS A3.0.

B. Welder Qualifications: Submit certified copies of qualification test records for each welder, welding operator, and tack welder to be employed in the Work. Comply with requirements of ANSI/AWS D1.1, Section 4.

1. Submit welders' identification marks (I.D.) for each welder along with qualifications.

C. Welding Procedures: Prior to commencement of welding, submit the procedure that will be used for qualifying welding procedures. For procedures other than those prequalified in accordance with ANSI/AWS D1.1, submit a copy of procedure qualification test records in accordance with the qualification requirements of ANSI/AWS D1.1, Section 4.

D. Welding Records and Data:

1. Retain all radiographs upon completion of fabrication.

2. Retain certifications that magnetic particle and dye-penetrant inspections have been satisfactorily completed.

3. Submit records of ultrasonic testing to HART upon completion.

4. If field welding is permitted, submit descriptive data for field welding equipment.

E. Mill Certificates: Retain mill certificates and certified copy of reports for all analyses and tests required by referenced ASTM and AWS specifications.

1.04 QUALITY ASSURANCE

A. General: Refer to Section 7.10 – Quality Assurance, for quality assurance requirements and procedures.

B. Qualifications of Welders: Welders, Welding operators, and tack welders shall be qualified in accordance with ANSI/AWS D1.1, Section 4 "Qualification."

1. For sheet steel, welders shall be qualified in accordance with ANSI/AWS D1.3, Section 4 "Qualification"

C. Qualification of Welding Procedures: Welding procedures shall be prequalified or qualified accordance with ANSI/AWS D1.1, Section 4 "Qualification"

1. For sheet steel, proposed welding procedures shall be qualified in accordance with ANSI/AWS D1.3, Section 4 "Qualification." Prequalification is not applicable to sheet steel.

D. Qualifications of Welding Inspector: Welds to be inspected by the Contractor shall be inspected and certified by a Contractor-employed AWS Certified Welding Inspector (CWI), certified in accordance with AWS QC1.

E. Qualification of Personnel Performing Nondestructive Testing: Personnel performing nondestructive testing shall be qualified and certified in accordance with the American

Society for Nondestructive Testing Recommended Practice No. SNT-TC-1A. Only persons certified for NDT Level I and working under a NDT Level II person or persons certified for NDT Level II may perform nondestructive testing.

F. Weldability of Steel: For structural steel requiring impact test qualification and for corrosion-resistant structural steel, the weldability of the steel and the procedures for welding it shall be established, by qualification in accordance with ANSI/AWS D1.1, Section 4 "Qualification," to match the notch toughness and weathering characteristics of the base metal.

G. Qualification of Stud-Connector Manufacturer: Stud shear connector manufacturer shall be qualified in accordance with ANSI/AWS D1.1, Annex G, "Manufacturers' Stud Base Qualification Requirements."

PART 2 – PRODUCTS

2.01 WELDING ROD/ELECTRODES

A. Electrodes for structural plates, shapes, pipes, tubes, and bars shall conform to ANSI/AWS A5 Series Standards and shall be coated rods or wire of size and classification number as recommended by their manufacturers for the positions and other conditions of actual use. Matching filler metal requirements shall conform to ANSI/AWS D1.1, Table 3.1 and Table 4.9.

B. Electrodes for sheet steel shall conform to ANSI/AWS A5 Series Standards and shall be coated rods or wire of size and classification number as recommended by their manufacturers for the positions and other conditions of actual use. Matching filler metal requirements shall conform to ANSI/AWS D1.3, Table 1.2.

C. Dynamic loaded structures shall be welded in accordance with SMAW process using E-7018 electrodes.

2.02 PREHEAT AND INTERPASS TEMPERATURE

A. Verify maintenance of preheat temperature and interpass temperature as required by applicable codes, standards, and procedures with calibrated temperature measuring instruments.

B. Maintain required material preheat and interpass temperature to 3 inches minimum in all directions from all surfaces being welded.

2.03 STUD SHEAR CONNECTORS

A. Only products of manufacturers qualified in accordance with ANSI/AWS D1.1, Annex G, will be accepted for the Work.

2.04 SHOP WELDING

A. Perform shop welding as indicated in accordance with ANSI/AWS D1.1, and ANSI/AWS D1.3, as applicable to the Work.

B. Welders shall mark adjacent to completed welds their welder I.D., using metal stamp, metal engraving, keel, paint stick, or other appropriate marking material.

C. Welding of stud shear connectors shall conform to ANSI/AWS D1.1, Section 7 "Stud Welding" and the stud manufacturer's instructions.

2.05 SHOP QUALITY CONTROL

A. Inspections and Tests by the Contractor:

1. Visual Inspection: All welds shall be visually examined in accordance with ANSI/AWS D1.1, Sections 6 and 7.8, as applicable. Quality of welds and standards of acceptance shall be in accordance with ANSI/AWS D1.1, as applicable.

2. Nondestructive Testing: Nondestructive testing shall conform to ANSI/AWS B1.10.

3. All Nondestructive Testing shall be performed by an independent testing laboratory employed by the Contractor.

4. Radiographic Testing: Radiographic testing of welds shall conform to ANSI/AWS D1.1, Section 6, Part E, and ASTM E94 and ASTM E1032, as applicable. Complete joint penetration groove welds shall be tested as follows:
   a. One out of ten (10 percent) with thickness equal to or less than 3/4 inch.
   b. One out of two (50 percent) with thickness greater than 3/4 inch and equal to or less than 1-1/2 inches.
   c. 100 percent for thickness greater than 1-1/2 inches.

5. Ultrasonic Testing: Ultrasonic testing of welds shall conform to ANSI/AWS D1.1, Section 6, Part F, and ASTM E164, as applicable. Complete joint penetration groove welds not accessible for radiographic testing shall be subjected to ultrasonic testing. The extent shall be the same as specified for radiographic testing.

6. Magnetic Particle Inspection: Magnetic particle inspection of welds shall conform to ASTM E709. Complete and partial joint penetration groove welds and fillet welds shall be inspected as follows:
   a. One out of five (20 percent) of complete joint penetration groove welds of tee and corner joints.
   b. One out of ten (10 percent) of partial joint penetration groove welds and fillet welds.

7. Acceptance or Rejection of Welds:
   a. Where inspection frequency is specified 10 percent, if reject occurs in the first 10-percent sample, select a second 10-percent sample and test. If no failure occurs in the second percent sample, accept the represented welds.
   b. Rework and retest the rejected welds in the first 10-percent sample. If a failure occurs in the second 10-percent sample, test 100 percent of the welds. Rework and retest all rejected welds.
   c. Where inspection frequency is specified 50 percent, adopt the same procedure.

8. Liquid Penetrant Inspection: Liquid dye penetrant inspection of welds shall conform to ASTM E165. Liquid penetrant inspection may be used for detecting discontinuities that are open to the surface.

9. Test Results: Test result information shall be forwarded to HART immediately after test results are available, stating the acceptance or rejection of fabricated

components, so that repairs and reinspection or testing may be performed as soon as possible.

10. Repairs: Unacceptable welds shall be repaired in accordance with ANSI/AWS D1.1, Section 5.26. Repaired or corrected welds shall be reinspected or retested as specified for the original weld.

B. Shop Inspections and Tests by HART:

1. All welds are subject to inspections and tests by HART. Welds to be inspected and tested by HART will be selected at random.

2. HART will make test results available to the Contractor.

PART 3 – EXECUTION

3.01 FIELD QUALITY CONTROL

A. Inspections and Tests:

1. Perform tests of field welds as herein specified for shop welds.

2. HART will perform visual inspections of field welds as herein specified for shop welds.

B. Field Welding: Field welding shall be performed as herein specified for shop welding.

END OF SECTION

This page intentionally left blank.

SECTION 05 58 00
FORMED METAL FABRICATIONS

PART 1 – GENERAL

1.01 SUMMARY

A. Description: This Section includes the Work for Formed Metal Fabrications and includes furnishing and installing steel gratings and frames; metal walkways; cast iron trench drains and gratings; pipe and conduit sleeves; steel angles and other armor for protection of concrete edges, corners, and sills; bearing devices and masonry plates; support brackets for elevator guide rails; ladders; concrete stair nosings; miscellaneous steel clips, angles, and brackets; anchors and fasteners; miscellaneous metalwork; related components and accessories; as indicated in the Design Plans.

B. Section Includes:

1. Installation
2. Galvanizing Repair
3. Field Painting

C. Related Sections:

1. Section 03 15 10 – Concrete Anchors
2. Section 03 60 00 – Grouting
3. Section 05 05 23 – Metal Fastenings
4. Section 09 91 00 – Painting

1.02 REFERENCES

A. ASTM International (ASTM):

1.	ASTM A27	Standard Specification for Steel Castings, Carbon, for General Application
2.	ASTM A36	Standard Specification for Carbon Structural Steel
3.	ASTM A47	Standard Specification for Ferritic Malleable Iron Castings
4.	ASTM A48	Standard Specification for Gray Iron Castings
5.	ASTM A53	Standard Specification for Pipe, Steel, Black and Hot-Dipped, Zinc-Coated, Welded and Seamless
6.	ASTM A108	Standard Specification for Steel Bar, Carbon and Alloy, Cold-Finished
7.	ASTM A123	Standard Specification for Zinc (Hot-Dip Galvanized) Coatings on Iron and Steel Products

8. ASTM A143 — Standard Practice for Safeguarding Against Embrittlement of Hot-Dip Galvanized Structural Steel Products and Procedure for Detecting Embrittlement
9. ASTM A153 — Standard Specification for Zinc Coating (Hot-Dip) on Iron and Steel Hardware
10. ASTM A307 — Standard Specification for Carbon Steel Bolts and Studs, 60,000 PSI Tensile Strength
11. ASTM A325 — Structural Bolts, Heat Treated, 120/105 ksi Minimum Tensile Strength
12. ASTM A384 — Standard Practice for Safeguarding Against Warpage and Distortion During Hot-Dip Galvanizing of Steel Assemblies
13. ASTM A449 — Standard Specification for Hex Cap Screws, Bolts and Studs, Steel, Heat Treated, 120/105/90 ksi Minimum Tensile Strength, General Use
14. ASTM A490 — Heat-Treated Structural Bolts, 150 ksi Minimum Tensile Strength
15. ASTM A500 — Standard Specification for Cold-Formed Welded and Seamless Carbon Steel Structural Tubing in Rounds and Shapes
16. ASTM A501 — Standard Specification for Hot-Formed Welded and Seamless Carbon Steel Structural Tubing
17. ASTM A536 — Standard Specification for Ductile Iron Castings
18. ASTM A563 — Standard Specification for Carbon and Alloy Steel Nuts
19. ASTM A668 — Standard Specification for Steel Forgings, Carbon and Alloy, for General Industrial Use
20. ASTM A780 — Standard Practice for Repair of Damaged and Uncoated Areas of Hot-Dip Galvanized Coatings
21. ASTM F436 — Standard Specification for Hardened Steel Washers

B. National Association of Architectural Metal Manufacturers (NAAMM):

1. ANSI/NAAMM AMP 521-01 — Pipe Railing Manual
2. NAAMM MBG 531-00 — Metal Bar Grating Manual

C. The Society for Protective Coatings (SSPC):

1. SSPC-PA-1 — Shop, Field, and Maintenance Painting of Steel
2. SSPC-SP 3 — Power Tool Cleaning
3. SSPC-SP 1 — Solvent Cleaning
4. Steel Structures Painting Manual, Volume 2, Systems and Specifications

1.03 SUBMITTALS

A. General: Refer to General Conditions Chapter 7, Section 7.7 – Submittal Procedures, and Section 7.8 – Shop Drawings, Product Data, and Samples, for submittal requirements and procedures.

B. Shop Drawings: Submit fully detailed shop drawings of metal fabrications and miscellaneous metalwork showing sizes, details of fabrication and construction, methods of assembly, locations of hardware, anchors, and accessories, and installation details.

C. Product Data: Submit manufacturers' product data for all manufactured items and products.

1.04 QUALITY ASSURANCE

A. General: Refer to General Conditions Chapter 7, Section 7.10 – Quality Assurance, for quality assurance requirements and procedures.

B. Work Quality:

1. Shop and field work shall be performed by mechanics, craftspersons, artisans, and workers skilled and experienced in the fabrication and installation of the ornamental metalwork involved.

2. Pipe and tube railings shall conform to ANSI/NAAMM AMP 521-01, "Pipe Railing Manual" including round tube.

3. Iron Contamination (Rust): Stainless steel with iron contamination will not be accepted. Dies for forming stainless steel components shall be stainless steel or chrome-plated to prevent embedment of minute iron particles. Stainless steel work, Type 316 minimum, shall be polished and cleaned after fabrication and installation to prevent rusting susceptibility.

4. Welds of Stainless Steel: Exposed welds shall be ground smooth and polished to match the adjacent surrounding finish of the stainless steel.

PART 2 – PRODUCTS

2.01 MATERIALS

A. General: Manufactured steel clips and angles will be accepted where they will meet the requirements of the Design Plans and are shown on shop drawings.

B. Steel Materials:

1. Shapes: Standard structural sections, shapes, plates, and bars, as indicated, conform to ASTM A36. Bars conforming to ASTM A108 will be accepted.

2. Tubing: Steel tubing conforming to ASTM A500 or ASTM A501, of size and shape indicated.

3. Pipe: Steel pipe or round tubing conforming to ASTM A53, Type E or S, Grade A, of diameters and sizes indicated. Pipe for sleeves and exterior locations shall be galvanized pipe as specified in ASTM A53.

C. Welding Rods/Electrodes: Conform to the requirements of Section 05 05 23 – Metal Fastenings.

D. Castings: ASTM A27, A47, A48, or A536, as applicable to the work.

E. Forgings: ASTM A668, of the class indicated or required.

F. Anchors and Bolts: ASTM A307, A325, A490, A449, and A563; F436 hardened steel washers as shown on the Design Plans. Bolts and studs, nuts, and washers shall be hot-dip galvanized in accordance with ASTM A153, except ASTM A490. ASTM A490 Bolts are not permitted to be galvanized.

G. Fasteners and Accessories: Furnish anchors and fasteners, washers, straps, and accessories as required for a complete and finished installation. Fasteners shall be at a minimum Type 316 stainless steel or galvanized steel as appropriate and approved for the location. Machine screws shall be used wherever possible.

H. Concrete and Masonry Anchors: Conform to the requirements of Section 03 15 10 – Concrete Anchors.

I. Gratings:

1. Bar-Type Gratings:
   a. Provide flat bar-type steel gratings of all-welded construction, consisting of bearing bars and secondary bars in rectangular configuration, with flat/plane level traffic surface, hot-dip galvanized after fabrication. Provide gratings with matching hot-dip galvanized steel frames for anchoring in concrete. Comply with applicable requirements of NAAMM MBG 531-00, "Metal Bar Grating Manual."
   b. Notch or frame openings in gratings for penetrations as indicated. Lay out units to allow grating removal without disturbing items penetrating the grating. Provide banding for openings in grating separated by more than four bearing bars, of same material and size as bearing bars.
   c. Cut, drill, and fit gratings as required for installation. Notching of bearing bars as supports to maintain elevations will not be permitted.

2. Perforated Sheet Gratings:
   a. Provide perforated sheet gratings fabricated from button-embossed structural steel sheet of minimum 12-gage thickness, with punched circular holes at apex of buttons for nonslip effect, and punched circular holes between buttons for drainage. Buttons shall be spaced 5/8 inch on centers. Drainage holes shall be spaced 1-1/4 inches on centers, eliminating buttons at these locations. Hole size for buttonholes shall be 1/8-inch diameter, plus or minus 1/32 inch. Hole size for drainage holes shall be 1/4-inch diameter, plus or minus 1/16 inch.
   b. Supporting edges shall be channel or U-shaped, formed edges capable of supporting a uniform live load of 300 pounds per square foot and a concentrated load of 3,000 pounds. Provide additional reinforcing as necessary to support the specified loads.
   c. Provide gratings with matching steel frames for anchoring in concrete. Provide frames with appropriate concrete anchors.
   d. Gratings and frames shall be hot-dip galvanized after fabrication in accordance with ASTM A123.

J. Metal Walkways:

1. Provide metal walkways where indicated, fabricated from checkered or diamond-pattern steel plate or from button-embossed structural steel sheet, as specified in Article 2.01I.2 herein, for perforated sheet gratings.

2. Walkway panels shall be of sizes and plate or sheet thickness indicated, cut or formed to shape and configuration indicated. Walkway panels shall be removable where they serve as covers for wireways and trenches. Provide removable panels/covers with matching steel frames for anchoring in concrete.

3. Walkway panels shall be capable of supporting a uniform live load of 300 pounds per square foot and a concentrated load of 3,000 pounds.

4. Walkway panels and frames, including supporting and reinforcing components and accessories, shall be hot-dip galvanized after fabrication in accordance with ASTM A123.

5. When checkered or diamond-pattern steel plate is provided for walkway panels, coat panels with nonslip encapsulated aluminum oxide material bonded or fused to the steel surface. Submit product data and sample for review and acceptance.

K. Trench Drains:

1. Provide standard manufactured trench frames with grated or solid covers, as indicated, of sizes and configurations indicated. Trench drains/frames and covers shall be manufactured of gray iron, conforming to ASTM A48 or ductile iron conforming to ASTM A536 or a combination of both. Provide heavy-duty type.

2. Provide covers with machined bearing surfaces to prevent rocking and rattling.

3. Where pedestrian traffic will travel over trench drains, provide covers with nonslip surface.

4. The portion of trench drains/frames to be in contact with concrete, earth, or fill shall be coated with asphalt emulsion.

L. Ladders:

1. Provide standard-manufactured or custom-fabricated steel ladders as required to meet the conditions indicated. Steel ladders shall be hot-dip galvanized after fabrication. Ladders may be anodized aluminum where not required to serve as a fire exit.

2. Ship's ladders shall be provided with railings and handrails. Vertical ladders exceeding 10 feet in height shall be provided with safety cages.

M. Concrete Stair Nosings: Cast aluminum stair nosings of type, size, and configuration indicated. Provide tread with engraved diamond pattern and nonslip surface. Minimum width of tread surface shall be 4 inches. Provide stair nosings with appropriate concrete anchors.

N. Grout: Provide high-strength, non-shrink grout for base plates and bearing plates in conformance with the requirements of Section 03 60 00 – Grouting.

2.02 FABRICATION

A. Metalwork shall be fabricated by firms or shops experienced and skilled in the custom fabrication and construction of metal fabrications and miscellaneous metalwork. There shall be no exposed screws, bolts, and fasteners in the finished work, except as indicated or required.

B. Welded connections shall be made in conformance with requirements of Section 05 05 23 – Metal Fastenings. Where exposed to view, welds shall be ground down and dressed smooth so that the shape and profile of the item welded is maintained.

C. Metal fabrications shall be prefabricated and preassembled in the factory or shop as far as practicable.

D. Form and fabricate the work to meet installation conditions. Include anchors, fasteners, and accessories to secure the work in place, as indicated.

E. The Contractor may furnish standard manufactured products for components when applicable, provided that such products meet space limitations and installation conditions.

2.03 GALVANIZING

A. Steel and ferrous metal items on the exterior of building, items exposed to moisture, gratings, and items indicated on Design Plans shall be galvanized after fabrication by the hot-dip process in accordance with ASTM A123. Weight of the zinc coating shall conform to the requirements specified under "Weight of Coating" in ASTM A123.

B. Safeguarding against steel embrittlement shall conform to the applicable requirements of ASTM A143.

C. Safeguarding against warpage and distortion of steel members shall conform to the applicable requirements of ASTM A384.

D. Shop-galvanized metalwork necessitating field welding that in any manner removes the original galvanizing shall be restored by field galvanizing repair in accordance with ASTM A780.

E. Bolts and screws for attachment of galvanized items shall be galvanized in accordance with ASTM A153.

2.04 CLEANING AND PAINTING

A. Nongalvanized Metalwork:

1. After fabrication and immediately before shop painting, ferrous metalwork shall be power tool cleaned in accordance with SSPC-SP 3 to remove mill scale, rust, grease, oil, and other foreign matter. Welds shall be thoroughly wire brushed.

2. After power tool cleaning and just before shop painting, ferrous metalwork shall be washed with solvent to remove dust and residue in accordance with SSPC-SP 1.

3. After cleaning and solvent washing, ferrous metalwork shall be shop painted with one coat of corrosion-inhibitive metal primer in accordance with SSPC-PA-1. Materials and application shall conform to SSPC-Paint 13, Red or Brown One-Coat Shop Paint.

B. Galvanized Metalwork:

1. Galvanized metal surfaces indicated to be painted shall be prepared for painting in conformance with ASTM D2092.

2. Galvanized metal surfaces shall then be given a shop coat of galvanized primer in conformance with SSPC-PA-1. Materials and application shall conform to SSPC-Paint 5, Zinc-Dust, Zinc Oxide and Phenolic Varnish Paint.

PART 3 – EXECUTION

3.01 INSTALLATION

A. Install metal fabrications and miscellaneous metalwork in accordance with the Design Plans and the shop drawings, using mechanics and workers skilled and experienced in the installation of the type of work involved.

B. Install metal fabrications and miscellaneous metalwork with all accessories furnished by the fabricator, as required for complete and finished installations.

C. Installation of metalwork shall be in accordance with approved shop drawings, true and horizontal, perpendicular, or at the required angle as the case may be, level and square, with angles and edges parallel with related lines of the building or structure.

D. Perform field welding, where required, in accordance with Section 05 05 23 – Metal Fastenings.

E. Where bases and bearing plates require grouting, perform the Work in accordance with Section 03 60 00 – Grouting.

F. Where bases and bearing plates require concrete anchor bolts, perform the work in accordance with Section 03 15 10 – Concrete Anchors.

3.02 GALVANIZING REPAIR

A. Galvanized surfaces that have become damaged from welding, handling, or installation shall be repaired immediately after installation with galvanizing repair material in accordance with ASTM A780.

3.03 FIELD PAINTING

A. After installation, exposed painted surfaces, field welds, and other abraded or damaged primed surfaces shall be prepared as required and touched up with an additional coat of the same primers for ferrous and galvanized surfaces as hereinbefore specified for shop painting. Spray-paint all touch-up work.

B. Finish field painting, where required, in accordance with Section 09 91 00 – Painting.

END OF SECTION

This page intentionally left blank.

SECTION 09 91 00

PAINTING

PART 1 – GENERAL

1.01 SUMMARY

A. Description:

1. Furnishing and applying finish painting work including surface preparation and priming, including:
   a. Painting and finishing of interior and exterior exposed items and surfaces throughout Contract, except as otherwise indicated. Surface preparation, priming and finish coats of paint specified are in addition to shop priming, painting and surface treatment specified under other Sections.
   b. Painting of bare and covered pipes, including color coding in accordance with ANSI A13.1 and ANSI Z53.1, painting of hangers, exposed steel and iron work, and primed metal surfaces of equipment installed under mechanical and electrical work, except as otherwise indicated.
   c. Paint striping of concrete floors, walls and underside of slabs where embedded High Voltage conduits are located.

2. Following categories of painting work are not included as part of field-applied finish work, or are included in other Sections of these Specifications:
   a. Shop Priming – Included under various Sections for structural steel, miscellaneous metal items, hollow metal work, and other similar items; fabricated components including wood casework, and shop-fabricated or factory-built mechanical and electrical equipment and accessories.
   b. Pre-Finished Items – Painting is not required when factory-finishing is specified for items including toilet enclosures, acoustic materials, casework, finished mechanical and electrical equipment including light fixtures and distribution cabinets.
   c. Concealed Surfaces – Painting is not required on wall and ceiling surfaces in concealed areas and generally inaccessible areas including foundation spaces, furred areas, pipe spaces, duct shafts and elevator shafts, as applicable to Contract.
   d. Finished Metal Surfaces – Do not paint anodized aluminum, stainless steel and similar finished materials unless otherwise indicated or scheduled.
   e. Operating Parts and Labels
      1) Do not paint moving parts of operating units, mechanical and electrical parts, including valve and damper operators, linkages, sensing devices, motor and fan shafts unless otherwise indicated.
      2) Do not paint over code-required labels, such as UL and FM, equipment identification, performance rating, name, and nomenclature plates.
      3) Do not paint automatic fire sprinkler heads.

B. Section Includes:

1. Condition of Substrate
2. Surface Preparation
3. Materials Preparation
4. Application
5. Field Quality Control
6. Piping Finish Schedule
7. Adjust and Clean

1.02 REFERENCES

A. American National Standards Institute (ANSI):

1. ANSI Z535.1 Safety Color Code
2. ANSI A13.1 Scheme for the Identification of Piping Systems
3. Painting and Decorating Craftsman's Manual and Textbook

B. Steel Structures Painting Council (SSPC):

1. SSPC-SP 1 Solvent Cleaning
2. SSPC-SP 3 Power Tool Cleaning

1.03 SUBMITTALS

A. General: Refer to Section 7.7 – Submittal Procedures, and Section 7.8 – Shop Drawings, Product Data, and Samples, for submittal requirements and procedures.

B. Manufacturer's Review: Before purchasing painting materials, review proposed systems, materials and substrates with qualified representatives of selected manufacturer. Obtain manufacturer's concurrence of proposed systems and recommended changes prior to submitting specified data. Record review with copy to HART.

C. Samples of color, sheen and texture. Provide a list of material and application for each coat of each finish.

1. Provide listing of material and application for each coat of each finish sample. For each color and paint material include texture to simulate actual conditions, on 8-1/2 inch by 11-inch hardboard.
2. For steel poles designated for painting, provide prepared samples of all hardware to be painted to HART, prior to any installations. Prior to pole installations, provide one pole painted in each required color at locations as directed by HART. Provide full-coat finish pole samples until required sheen, color, and texture is obtained. Following approval, duplicate finish on all remaining poles and other items designated to receive matching finish.

D. Manufacturer's Data:

1. Technical information, including paint label analysis and application instructions for each material proposed for use; include surface preparation, amended to comply with specified requirements.

2. List and cross-reference materials to specific paint and finish system and application. Identify by manufacturer's catalog number and general classification.

E. Certificate from manufacturer's representative reporting on actual job application for Acid-Resistant Finishes. Include date of inspection, duration, parties present, description of surfaces, and description of application procedure witnessed.

1.04 QUALITY ASSURANCE

A. General: Refer to Section 7.10 – Quality Assurance, for quality assurance requirements and procedures.

1.05 PRODUCT DELIVERY, STORAGE, AND HANDLING

A. Deliver materials to work site in manufacturer's original, unopened packages and containers bearing manufacturer's name and label, and following information:

1. Name or title of material, color and number

2. FS number, if applicable

3. Manufacturer's batch number and date of manufacture

4. Thinning instructions

5. Application instructions

6. Name of Supplier

B. Store materials and equipment in a properly ventilated, designated storage space on the site. Keep storage space neat, clean, and accessible. Protect areas from paint spillage.

1.06 PROTECTION

A. Place paint-soaked or solvent-soaked rags, waste, and other materials that might constitute a fire hazard in closable metal containers and remove from premises at the close of each day's work. Take precautions to prevent fire.

B. Protect the work of other trades against damage, marking or injury, by suitable covering, during the progress of the painting and finishing work. Repair damage.

C. Refinish work damaged by defective workmanship or materials, as directed by HART.

1.07 WORK SITE CONDITIONS

A. Apply solvent-thinned paints only when the temperature of surfaces to be painted and the surrounding air temperatures are between 45 degrees Fahrenheit and 95 degrees Fahrenheit, unless otherwise permitted by the paint manufacturer's printed instructions.

B. Do not apply paint to damp or wet surfaces in rain, fog, or mist when the relative humidity exceeds 85 percent or when the surface to be painted is less than 5 degrees Fahrenheit above the dew point of the surrounding air. Painting may continue only if areas are

enclosed and heated during application and drying periods are within temperature limits specified by paint manufacturer.

PART 2 – PRODUCTS

2.01 MATERIAL QUALITY

A. Provide undercoat paint produced by the same manufacturer as the finish coats. Use thinners approved by the paint manufacturer, and use only to recommended limits.

B. Use primers and undercoats that are suitable for each surface to be covered and that are compatible with the finish coat required.

C. Use products of the same manufacturer for succeeding coats where shop primed materials are to be finish painted and prime coat materials are by a different manufacturer than the finish coat materials. Confirm compatibility of the primers with the manufacturer of the finish coat paints.

D. Materials necessary to complete the painting are herein specified and generically listed. Except for specialty items or as otherwise specified materials for a system shall be by one manufacturer.

1. Equivalent materials from the architectural product line of other manufacturers will be acceptable, subject to HART approval.

E. Materials for undercoats and finish coats of paint shall be ready-mixed and shall not be changed, except for thinning of undercoats (when required), reinforcing or coloring, which shall be in conformance with the recommendations of the manufacturer.

F. Dry film thickness (DFT), in mils, and the number of coats required to obtain that thickness shall be in conformance with the recommendations of the paint manufacturer of each system.

2.02 COLORS AND FINISHES

A. Before beginning the work, the Contractor will be furnished with a color schedule, for surfaces to be painted and finished. Match the color of chips and submit samples as specified before proceeding. Colors may not be the manufacturer's standard colors and special colors shall be provided, as required.

B. Use representative colors when preparing samples for review. Final acceptance of colors will be from samples applied on the job.

C. Proprietary names used to designate colors or materials are not intended to imply that products of the named manufacturers are required to the exclusion of equivalent products of other manufacturers.

D. Color Pigments: Pure, nonfading, applicable types to suit the substrates and service indicated.

PART 3 – EXECUTION

3.01 CONDITION OF SUBSTRATE

A. Examine the areas and conditions under which painting is to be performed. Do not proceed with the work until unsatisfactory conditions have been corrected.

B. Do not paint over dirt, rust, scale, grease, moisture, scuffed surfaces, or conditions otherwise detrimental to the formation of a durable paint film.

C. Surface to receive paint shall be clean, dry, smooth and dust free before application of any material.

3.02 SURFACE PREPARATION

A. General: Prepare and clean substrates in accordance with the paint manufacturer's instructions and as herein specified, for each particular substrate condition.

B. Preparation:

1. Remove hardware, hardware accessories, machined surfaces, cover plates, plates, lighting fixtures, and similar items in place and not to be finish painted, or provide surface applied protection before surface preparation and painting operations. Remove such items if necessary for the complete painting of the items and adjacent surfaces. Following completion of painting of each space or area, reinstall the removed items using workers skilled in the trades involved.

2. Clean surfaces to be painted before applying paint or surface treatments. Remove oil and grease with clean cloths and cleaning solvents before and after mechanical cleaning. Vacuum clean interior surfaces to be painted.

3. Mask, cover, protect or remove adjacent articles, joint cavities and surfaces not to be painted.

4. Before applying succeeding coats, primers and undercoats shall be integral and shall perform the function for which they are specified. Properly prepare and touch up scratches, abrasions, or other disfigurements, and remove foreign matter before proceeding with the following coat. Featheredge spot-priming or spot-coating into adjacent coatings to produce a smooth blending and level surface.

C. Ferrous Metals:

1. Clean and prime bare ferrous metal surfaces that have not been shop primed before the surface is damaged by weather or other exposure. After erection is completed, touch up heads of bolts, welded surfaces that are unpainted, and surfaces or areas where the primer has been abraded or otherwise damaged.

2. Before application of field coats on shop primed ferrous metal surfaces, remove oil, grease, welding flux residues, and other contaminants harmful to painting in accordance with SSPC SP 1. After solvent cleaning, prepare bare metal surfaces by removing stratified rust (rust scale), loose mill scale, loose or non-adherent rust, and detrimental welding deposits by methods specified in SSPC SP 3. Prepare abraded surfaces of shop-coated metal by wire-brushing or sanding to bare metal.

D. Galvanized Metals:

1. Clean unpainted galvanized metal surfaces of oil, grease, and other contaminants in accordance with SSPC SP 1, and pretreat in accordance with SSPC Manual, Volume 1, Chapter 3.1. Prime with acceptable primer as recommended by paint manufacturer.

2. Before application of subsequent coats, thoroughly clean surfaces to ensure the removal of grease, soil, dust, and foreign matter. Take particular care to prevent the

contamination of cleaned surfaces with salts, acids, alkalis, or other corrosive chemicals before prime coating and between subsequent coats of paint.

3. Apply pretreatment in accordance with manufacturer's recommendations and requirements.

E. Primed Surfaces: Touch-up primed metal surfaces using the same prime paint as originally applied or a prime paint determined to be compatible.

F. Cementitious Materials:

1. Prepare cementitious surfaces of concrete, concrete block, and cement plaster to be painted by removing efflorescence, chalk, dust, dirt, grease, and oils; roughen as required to provide sufficient bite on surface.

2. Determine the alkalinity and moisture content of the surfaces to be painted by performing appropriate tests. If the surfaces are found to be sufficiently alkaline to cause blistering and burning of the finish paint, correct this condition before application of paint.

3. Do not paint over surfaces where the moisture content exceeds 1 percent, unless otherwise permitted in the manufacturer's printed directions and accepted by HART.

3.03 MATERIALS PREPARATION

A. Mix and prepare painting materials in accordance with the manufacturer's directions.

B. Store materials not in actual use in tightly covered containers. Maintain containers used in storage, mixing, and application of paint in a clean condition, free of foreign materials and residue.

C. Stir materials before application to produce mixture of uniform density and as required during the application of the materials. Do not stir film that may form on the surface into the material. Remove the film and, if necessary, strain the material before using.

D. Tint each undercoat a different shade to facilitate identification of each coat where multiple coats of the same material are to be applied. Provide a code number to identify material tinted by the manufacturer.

3.04 APPLICATION

A. General:

1. Apply paint in accordance with the manufacturer's instructions. Use applicators and techniques best suited for the substrate and type of material being applied. Use brushes best suited for the type of material being applied. Use rollers of carpet, velvet back, or high pile sheep's wool as recommended by the paint manufacturer for material and texture required.

2. Spread materials evenly and smoothly without runs, sags, or other defects. Make edges of paint adjoining other materials or colors sharp and clean, without overlapping. Allow sufficient time between coats to ensure proper drying.

3. The number of coats and paint film thickness required is the same regardless of the application method. Do not apply succeeding coats until the previous coat has completely dried. Sand between each enamel coat application with fine sandpaper or

steel wool, or rub surfaces with pumice stone where required to produce an even, smooth surface in accordance with the coating manufacturer's instructions.

4. Apply additional coats when undercoats, stains, or other conditions show through the final coat of paint, until the paint film is of uniform finish, color, and appearance. Ensure that surfaces, including edges, corners, crevices, welds, and exposed fasteners, receive a film thickness equivalent to that of flat surfaces.

5. Paint surfaces behind movable equipment and furniture the same as similar exposed surfaces. Paint surfaces behind permanently fixed equipment or furniture with prime coat only.

6. Paint the backsides of access panels and removable or hinged covers to match the exposed surfaces.

7. Finish doors on tops, bottoms, and side edges the same as the faces, unless otherwise indicated. Do not paint over UL Labels.

B. Mechanical and Electrical Work:

1. Painting of mechanical and electrical work is limited to those items exposed in mechanical equipment rooms and in occupied spaces, except that piping is to be painted.

2. Mechanical items to be painted include:
   a. Piping, pipe hangers, and supports
   b. Heat exchangers
   c. Tanks
   d. Ductwork, insulation
   e. Paint interior surfaces of ducts, where visible through registers or grilles, with a flat, non-specular black paint, before final installation of equipment
   f. Mechanical equipment and supports
   g. Accessory items

3. Electrical items to be painted include:
   a. Conduit and fittings
   b. Hangers and supports
   c. Electrical equipment, and supports
   d. Accessory items

C. Dry Film Thickness (DFT):

1. Apply as many coats of paint as necessary to obtain the required minimum DFT in conjunction with each paint system but not fewer than the number of coats recommended by the paint manufacturer to obtain that thickness.

2. In no case shall the DFT be less than 5 mils for a system.

3. Use the more stringent requirements where the paint manufacturer's instructions differ from these Specifications.

4. The specified film thickness shall be a minimum of the profile depth of the coating, when dry, as measured from the face of the surface to be coated.

5. Measure film thickness as follows:
   a. Magnetic surfaces by use of an Elcometer thickness gauge
   b. Nonmagnetic surfaces by a pit gauge or micrometer, one measurement per 100 square foot per day of application

D. Scheduling Painting:

1. Apply the first-coat material to surfaces that have been cleaned, pretreated, or otherwise prepared for painting as soon as practicable after preparation and before subsequent surface deterioration.

2. Allow sufficient time between successive coats to permit proper drying. Do not recoat until paint has dried to where it feels firm, does not deform or feel sticky under moderate thumb pressure, and the application of another coat of paint does not cause lifting or loss of adhesion of the undercoat.

E. Prime Coats: Recoat primed and sealed walls and ceilings where there is evidence of suction spots or unsealed areas in first coat, to ensure a finish coat with no burn-through or other defects due to insufficient sealing.

F. Transparent (Clear) Finishes:

1. On exposed portions, use multiple coats to produce glass-smooth surface film continuity of even luster. Provide a finish free from laps, cloudiness, color irregularity, runs, brush marks, orange peel, nail holes, and other surface imperfections.

2. Provide satin finish for final coats, unless otherwise indicated.

G. Brush Application:

1. Brush-out and work brush coats onto the surfaces in an even film. Cloudiness, spotting, holidays, laps, brush marks, runs, sags, ropiness, or other surface imperfections will not be acceptable. Neatly draw gloss and color break lines.

2. Brush-apply primer or first coats, unless use of mechanical applicators are permitted.

H. Mechanical Applicators: Use mechanical methods for paint application when permitted by governing ordinances and trade union regulations. If permitted, limit to those surfaces impracticable for brush applications. Limit roller applications (generally) to interior wall and ceiling finishes for second and third coats. Apply each roller coat to provide the equivalent hiding as brush-applied coats.

I. Completed Work: Match accepted samples for color, texture, and coverage. Remove, refinish, or repaint work not in compliance with specified requirements.

3.05 FIELD QUALITY CONTROL

A. HART reserves the right to invoke the following test procedures at any time, and as often as deemed necessary, during the period when coating operations are being conducted.

1. HART may engage the services of a testing laboratory to sample the coatings being applied. The testing laboratory may perform appropriate tests, as deemed necessary, for the following characteristics:
   a. Coating materials qualitative and quantitative analysis
   b. Coating adhesion
   c. Coating total dry film thickness

d. Compliance with VOC content restrictions

e. Other specified characteristics deemed appropriate for testing by HART

2. If results show tested materials being used do not comply with requirements, remove non-complying materials, pay the costs for recoating, retesting, and recoat surfaces coated with rejected materials.

3. If results are in compliance with Contract requirements, the cost of laboratory test will, by appropriate change order, be charged to HART.

B. Samples of materials delivered to the site will be taken, identified, and sealed, and certified in the presence of the Contractor.

C. Perform appropriate tests for the following characteristics in accordance with the specified manufacturer's standards: abrasion resistance, apparent reflectivity, flexibility, washability, absorption, accelerated weathering, dry opacity, accelerated yellowness, recoating, skinning, color retention, alkali resistance, and quantitative materials analysis.

D. Surface conditions and paint materials will be inspected during painting operations. Each paint operation shall be reviewed and accepted by HART before subsequent painting operations are started.

E. Color of Painted Surface: Remain free from visible fading at end of one year. Material shall show no evidence of blisters, running, peeling, scaling, chalking, streaks, and stains. Washing with alkali-free soap and water shall remove surface dirt without producing deleterious effects.

F. Finished Surfaces: Free from runs, drips, waves, ridges, laps, brush marks, and variations in color, texture, and finish.

3.06 PIPING FINISH SCHEDULE

A. Color of painted pipe, pipe bands, fittings, valves, and insulation that are installed exposed or behind finished walls or ceilings as listed below. Colors of pipe contents designator and arrow: Black. Space designators and direction-of-flow arrows not more than 20 feet on center.

Service	Pipe Contents Designator	Pipe Color	Pipe Band Color
Domestic Cold Water	CW	Blue	None
Chilled Water:			
Supply	CHWS	Blue	Yellow
Return	CHWR	Blue	Yellow
Fire Water	F	Red, Federal Standard Color 11120	None
Compressed Air		Red	None
Condensate	C	White	None
Re-Heat Waste:			
Supply	RHS	Orange	None
Return	RHR	Orange	None
Solid Waste	S	White	None
Vents	V	Black	White
Air and Control Air	A	Green	None

3.07 ADJUST AND CLEAN

A. Touch up and restore finish where damaged. Touch up abraded, stained, or otherwise disfigured portion or refinish as necessary to produce an acceptable job.

B. Remove spilled, splashed, or splattered paint from finish surface and floors not intended to be painted or previously painted.

C. Do not mar surface finish of items being cleaned.

D. Leave paint storage spaces clean and in condition required for equivalent spaces in the Contract.

END OF SECTION

SECTION 09 96 23

GRAFFITI-RESISTANT COATINGS

PART 1 – GENERAL

1.01 SUMMARY

A. Description: These specifications include the Work for graffiti-resistant coatings applied to concrete on the exposed concrete surface area requiring this protection, in conformance with details and notes shown on the plans and as specified within this specification.

B. Section Includes:

1. Examination
2. Inspection
3. Application
4. Cleanup and Repairs

C. Related Sections

1. Section 03 35 00 – Concrete Finishing

1.02 SUBMITTALS

A. General: Refer to Section 7.7 – Submittal Procedures, and Section 7.8 – Shop Drawings, Product Data, and Samples, for submittal requirements and procedures.

B. Submittals shall include the following requirements:

1. Product Data:
   a. Materials list of items proposed to be provided under this Section.
   b. Manufacturer’s specifications and other data needed to prove compliance with the specified requirements.
   c. Manufacturer’s recommended installation procedures which, when approved by the Engineer or Architect, will become the basis for accepting or rejecting actual installation procedures used on the Work.

1.03 QUALITY ASSURANCE

A. General: Refer to Section 7.10 – Quality Assurance, for quality assurance requirements and procedures.

B. Contractor shall contact the manufacturer prior to bidding the Work so as to become familiarized with current costs, application procedures and notification requirements.

C. Use adequate numbers of skilled workers who are thoroughly trained and experienced in the necessary crafts and who are completely familiar with the specified requirements and the methods needed for proper performance of the Work of this Section.

D. Applicator shall complete and file a "Job Report" with manufacturer certifying conformance of application procedures and quantities to the manufacturer's requirements.

E. Applicator shall be approved by the manufacturer of the graffiti-resistant coatings.

F. Mock-Up Number 1: Apply a sample of the graffiti-resistant coating to a 3 square foot concrete slab made from a concrete mix similar to the actual concrete that the graffiti-resistant coating will be applied and submit it to the engineer or architect for approval to proceed with Mock-Up Number 2.

G. Mock-Up Number 2:

1. After receiving approval from the engineer or architect to proceed with mock-up number 2, apply graffiti resistant coating to a 20 square foot area of the actual exposed concrete surface area requiring this protection, in conformance with details and notes shown on the plans and as specified within this specification.

2. Upon approval by HART of mock-up number 2, the applicator may proceed with the remainder of his Work as specified within this specification.

1.04 ENVIRONMENTAL CONDITIONS

A. Do not employ or apply products that do not comply with Local, State, and/or Federal Regulations.

B. Store materials protected from the exposure to harmful conditions and at temperatures and humidity conditions recommended by the manufacturer.

C. Do not apply liquid material in unventilated spaces.

D. Do not proceed with application of graffiti-resistant coatings when the ambient temperature is less than 45 degrees Fahrenheit, when low temperature of 40 degrees Fahrenheit or less is predicted within a period of 24 hours, or if rain is expected in the next 24 hours.

E. Do not apply graffiti-resistant coatings during inclement weather, or within 5 days after surfaces have become wet from rainfall or other moisture.

1.05 EXTRA STOCK (MAINTENANCE MATERIALS)

A. Upon completion of the graffiti-resistant coating application, the contractor shall provide HART with 20 gallons of the graffiti-resistant material used on the project delivered in 1 gallon unopened and properly labeled containers for maintenance purposes.

1.06 MAINTENANCE

A. Furnish HART with five 1-gallon unopened and properly labeled containers of each of the following:

1. Graffiti removal material recommended by the manufacturer for the substrate and the graffiti protection system specified.

2. Restorer for the coating material specified, designed to restore graffiti resistance as required after five removals.

1.07 PRODUCT HANDLING

A. Deliver materials to the job-site in satisfactory sealed containers with labels intact with manufacturer's name, brand name, type of material and batch number.

B. Store materials in their original unopened containers in compliance with manufacturer's printed instructions, and these specifications.

C. Inspect for approval before containers are opened and any condemned materials to be removed from the job-site.

D. Protect anti-graffiti coating materials from exposure to weather or damage caused by other construction operations.

1.08 WARRANTY

A. The contractor shall provide a warranty, which guaranties that during a period of two years from date of completion and acceptance of the work, the coating will not turn white, peel, chip or crack, and that the Contractor will without additional cost to HART, promptly make any repairs required as a result of ordinary wear and tear of the elements, and further guaranties that any defective material or work shall be properly repaired or replaced without additional cost to HART.

PART 2 – PRODUCTS

2.01 ACCEPTABLE MATERIALS

A. Materials shall be the products of one manufacturer and be either the ones upon which the design is based on the products of the manufacturer approved in advance by HART.

B. Material shall be the appropriate type as recommended by the manufacturers (hereinafter named) or provide an equal product of another manufacturer approved in advance by HART.

2.02 ACCEPTABLE PRODUCTS

A. "Super-Kote A-G5" Sealer manufactured by Ven-Chem Company Inc. P.O. Box 3186, Santa Barbara, California, phone (805) 967-7600 or “Monochem Permashield” by Frazee Paint Co. Research Report No. 28080, phone (800) 826-9048.

B. The "Graffitirasor Systems" manufactured by Rainproof Systems, City of Commerce, CA 90022, Research Report No. 25035, phone (213) 887-8761.

C. “Vandal Guard” by Rainguard Products Co., 821 W. Hyde Park Blvd.; Inglewood, CA 90302, phone (310) 670-2953.

2.03 MATERIAL PERFORMANCE CRITERIA

A. Completed graffiti-resistant coating system shall include the following performance criteria:

1. Shall have a flat non-glossy appearance.
2. Shall be non-yellowing and contain no waxes, urethanes or other yellowing resins.
3. Shall cause little or no change in the appearance of the treated surface.
4. Shall allow moisture vapor transmission.
5. Can be cleaned a minimum of five times.
6. Shall be renewable and repairable.
7. Be 98% effective in removing all graffiti on concrete surfaces.
8. Dirt pickup shall not be increased by coating.
9. Manufacturer will warrant product performance.

10. Product shall be VOC compliant.
11. Conform to all State and City waste disposal regulations.
12. Product shall be capable by manufacturer's literature of withstanding 5 years exterior exposure without significant loss of protection, other than spot restoration of areas attacked by graffiti, cleaned, and recoated per written instructions of manufacturer.
13. Graffiti-resistant coating must be resistant to rain, weather, abrasion, peel, ultra-violet, and be clear and non-yellowing.
14. Coating should be able to withstand repeated removal of all types of paint and other graffiti materials with little or no defacement of or change to the original surface.

B. Any submitted product must be applied to sample area and have the test listed under "C" below performed.

C. After application of materials, a field demonstration or test will be performed to the satisfaction of HART which will include:

1. Spray paint applied to material to simulate graffiti attack.
2. Attack allowed to stand 14 days before removal.
3. Removal by manufacturer's recommended process shall determine that at least 98% of the graffiti has been removed.

2.04 EQUIPMENT

A. All clear materials shall be applied by airless spray equipment.

PART 3 – EXECUTION

3.01 EXAMINATION

A. Examine the areas and conditions on which materials of this Section will be applied. Correct conditions detrimental to timely and proper completion of the Work. Do not proceed with contracted Work of this section until such detrimental conditions are corrected at no added cost to HART.

3.02 INSPECTION

A. Applicator shall notify manufacturer's representative a minimum of 72 hours prior to scheduled application for field inspection.

3.03 APPLICATION

A. Preparation of Surface:

1. Do not commence application until surface is structurally sound, clean, dry, and free from excess dust, loose paint, greasy stains and efflorescence.
2. Form oils should be completely removed.
3. All cracks, voids, bugholes, or mortar shrinkage shall be properly repaired in accordance with Section 03 35 00 – Concrete Finishing, and primed if necessary to make the surface uniform.

4. Allow substrate to dry and age at least 3 weeks before applications of anti-graffiti coating.
5. Remove existing graffiti with "WipeOut" graffiti remover or approval equal. "WipeOut" product of National Chemsearch, Irving Texas, phone (1-(800)-527-9921).
6. Applicator/Contractor to use the application tools and methods as recommended by the coating manufacturer and approved by HART.
7. Applicator/Contractor is responsible for daily application of a small test area on surface to be coated before starting daily general application to assure desired results.

B. Application of Graffiti-Resistant Coating:

1. Coverage: Apply materials at rate per square foot recommended by the material manufacturer.
2. Application Sequence: Apply two coats of the base material followed by one coat of final coat in compliance with manufacturer's specifications and recommendations.
   a. A minimum drying time of two hours should be allowed between the first and second base coats.
   b. A minimum drying time of 4 hours should be allowed between the second base coat and the final coat.
3. Graffiti-resistant coating process should achieve a non-yellowing, durable, clear film completely protecting the substrate from penetration of paint, ink, crayons, dirt, air pollutants, grime and similar materials and help maintain and protect the original appearance of the surface.
4. Base coat material should be applied with a "crosshatch" method of several horizontal passes followed immediately by vertical passes to build up a heavy wet film to insure sufficient uniformity. This is considered one coat and the same method is repeated for the second coat to build a minimum dry film thickness of 3 mils. Spray large areas in sections so overlap occurs before previously coated areas have dried.
   a. Start application at top of column or wall and work down surface.
   b. Schedule Work so that the stopping point each day falls at an opening, column or corner.
5. Final coat should be applied with a "crosshatch" method of several horizontal passes followed immediately by vertical passes to build up a film to insure sufficient uniformity. This is considered one coat.

C. Protection: Applicator shall be responsible for protection of this and all adjacent work from damage during application with dropcloths or other suitable materials.

3.04 CLEANUP AND REPAIRS

A. Cleanup: Contractor shall carefully remove all protection materials from adjacent surfaces and any residue resulting from this operation. Completely remove oversprays and spills as soon as possible before curing and excess materials from the job site.

B. Repairs: Any soiling of the work of this section shall be repaired by the installer of the graffiti-resistant material as approved by HART at no added cost to HART.

This page intentionally left blank.

SECTION 09 97 13

STEEL COATINGS

PART 1 – GENERAL

1.01 SUMMARY

A. Description:

1. This Section consists of furnishing and applying special coating systems to items and surfaces scheduled, including surface preparation, prime coats, and top coats, as shown on the Design Plans and specified herein.
2. This Section also includes surface preparation and coating of structural steel; metal decking; metal fabrications on guideway; barrier rail; box and plate girders; beams; rain leaders; scuppers; superstructure access hatch; expansion joint cover plate; and bridge support brackets.

B. Section Includes:

1. Examination
2. Preparation
3. Application
4. Cleaning
5. Protection
6. Coating Schedule

C. Related Sections:

1. Section 09 91 00 – Painting

1.02 REFERENCES

A. ASTM International (ASTM):

1.	ASTM B117	Standard Practice for Operating Salt Spray (Fog) Apparatus
2.	ASTM D2247	Standard Practice for Testing Water Resistance of Coatings in 100% Relative Humidity
3.	ASTM D4060	Standard Test Method for Abrasion Resistance of Organic Coatings by the Taber Abraser
4.	ASTM D4541	Standard Test Method for Pull-Off Strength of Coatings Using Portable Adhesion Testers
5.	ASTM G154	Standard Practice for Operating Fluorescent Light Apparatus for UV Exposure of Nonmetallic Materials

B. Steel Structures Painting Council (SSPC):

1.	SSPC SP-6	Commercial Blast Cleaning
2.	SSPC SP-10	Near-White Blast Cleaning

1.03 SUBMITTALS

A. General: Refer to Section 7.7 – Submittal Procedures, and Section 7.8 – Shop Drawings, Product Data, and Samples, for submittal requirements and procedures.

B. Product data for each coating system specified, including block fillers and primers.

1. Provide the manufacturer's technical information, including label analysis and instructions for handling, storing, and applying each material proposed for use.
2. List each material and cross-reference the specific coating, finish system and application. Identify each material by the manufacturer's catalog number and general classification.
3. Provide certification from the manufacturer that products supplied comply with local regulations controlling use of volatile organic compounds (VOCs).
4. Provide 7 by 10-inch samples of each type of metal for each color and finish.

1.04 QUALITY ASSURANCE

A. General: Refer to Section 7.10 – Quality Assurance, for quality assurance requirements and procedures.

B. Applicator Qualifications: Engage an experienced applicator who has successfully completed coating system applications similar in material and extent to those indicated for the work. Submit applicator qualification records to HART for approval.

C. Single Source Responsibility: Provide primers and undercoat material produced by the same manufacturer as the finish coats for each type of coating. Use only thinners recommended by the manufacturer and only within recommended limits.

1.05 DELIVERY, STORAGE AND HANDLING

A. Deliver materials to the work site in the manufacturer's original, new, unopened packages and containers bearing the manufacturer's name and label and the following information:

1. Name or title of material
2. Product description (generic classification or binder type)
3. Manufacturer's name, stock number and date of manufacture
4. Contents by volume, for major pigment and vehicle constituents
5. Thinning instructions
6. Application instructions
7. Color name and number
8. Handling instructions and precautions

B. Store materials not in use in tightly covered containers in a well-ventilated area at a minimum ambient temperature of 45 degrees and 100 degrees Fahrenheit. Maintain containers used in storage in a clean condition, free of foreign materials and residue.

C. Keep storage area neat and orderly. Remove oily rags and waste daily. Take necessary measures to ensure that workers and work areas are protected from fire and health hazards resulting from handling, mixing, and applying the coatings.

1.06 PROJECT CONDITIONS

A. Apply coatings only when the temperature of surfaces to be coated and surrounding air temperatures are between 50 and 105 degrees Fahrenheit.

1. Relative humidity should be below 85 percent and surface temperature at least 5 degrees Fahrenheit above dew point.

2. Perform Work within all temperature and environmental conditions stated on the product labels.

B. Do not apply coatings in snow, rain, fog, or mist; when relative humidity exceeds 85 percent; at temperatures less than 5 degrees Fahrenheit above the dew point; or to damp or wet surfaces.

1. Allow wet surfaces to dry thoroughly and attain the temperature and conditions specified before proceeding with or continuing the coating operation.

2. Work may continue during inclement weather only if areas and surfaces to be coated are enclosed and the temperature within the area can be maintained within limits specified by the manufacturer during application and drying periods.

C. Protect surfaces to be coated.

PART 2 – PRODUCTS

2.01 MANUFACTURERS

A. Subject to compliance with requirements, provide products as manufactured by PPG Protective & Marine Coatings (PMC) or approved equal.

2.02 SPECIAL COATING MATERIALS

A. Material Compatibility: Provide primers, finish coat material, and related materials that are compatible with one another and the substrates indicated under conditions of service and application, as demonstrated by the manufacturer based on testing and field experience.

B. Material Quality:

1. Provide the highest grade of the various coatings as regularly manufactured by acceptable coating manufacturers. Materials not displaying manufacturer's identification as a best-grade product will not be acceptable.

2. Proprietary Names: Use of manufacturer's proprietary product names to designate colors or materials are not intended to imply that products named are required to be used to the exclusion of equivalent products of other manufacturers. Furnish the manufacturer's material data and certificates of performance for proposed substitutions.

C. Colors shall be as specified in Section 09 91 00 – Painting.

2.03 PRODUCT REQUIREMENTS

A. Polysiloxane Coating – Two-Component (Primer/Finish Coat):

1. Minimum Solids by Volume: 70.0 plus or minus 3.0 percent for primer; 90.0 plus or minus 3.0 percent for finish coat.

2. Colors: Full Range.

3. Abrasion (ASTM D4060): CS-17 wheel 1,000 gram load. Requirement of no more than 53 milligrams loss after 1,000 cycles.
4. Adhesion (ASTM D4541): Elcometer; not less than 2,000 pounds per square inch (psi) pull, average of three trials.
5. Exterior Exposure: Exposed at 45 degrees facing south light industrial area; no blistering, cracking or delamination of film; no more than 1/32-inch rust creepage at scribe or no more than 2-percent rusting at edges after 60 months exposure.
6. Humidity (ASTM D2247): No face corrosion or blistering after 5,500 hours.
7. Salt Spray (ASTM B117): No face corrosion or blistering after 5,500 hours.
8. Gloss Retention (ASTM G154): QUV bulb; greater than 50-percent gloss retention at 26 weeks.

2.04 PRIMERS

A. Provide the manufacturer's recommended zinc-rich epoxy primer that is compatible with the substrate and finish materials indicated. Subject to compliance with requirements, provide metal primer under polysiloxane. Primer shall be Amercoat 68HS as manufactured by PPG PMC, or approved equal with dry film thickness (DFT) of 3 to 5 mils.

2.05 FINISH COAT MATERIALS

A. Provide the manufacturer's recommended factory-formulated exterior polysiloxane finish coat materials. Subject to compliance with requirements, provide polysiloxane finish coat as manufactured by PPG PMC, PSX 700, or approved equal with 5 to 7 mils DFT.

PART 3 – EXECUTION

3.01 EXAMINATION

A. Examine substrates and conditions under which coatings will be applied for compliance with requirements on applying coatings. Surfaces to receive coatings must be thoroughly dry before coatings are applied.

1. Do not proceed with coating application until unsatisfactory conditions have been corrected.
2. Start of application will be construed as the applicator's acceptance of surfaces within that particular area.

B. Coordinating Work:

1. Review sections in which other coatings are provided to ensure compatibility of the total systems for various substrates. Upon request, furnish information on the characteristics of specified finish materials to ensure compatible primers.
2. Notify the Construction Manager of problems anticipated using the coatings specified over substrates primed by others.

3.02 PREPARATION

A. General: Remove hardware and hardware accessories, plates, machined surfaces, lighting fixtures, and similar items already in place that are not to be coated, or provide

surface-applied protection prior to surface preparation and coating. Remove these items, if necessary, to completely coat the items and adjacent surfaces. Following the coating operations in each space or area, ensure that removed items are reinstalled by workers skilled in the trades involved.

B. Cleaning: Before applying coatings or other surface treatments, clean the substrates of substances that could impair bond of the various coatings. Remove oil and grease prior to cleaning. Schedule cleaning and coating application so dust and other contaminants from the cleaning process will not fall on wet, newly coated surfaces.

C. Surface Preparation: Clean and prepare surfaces to be coated according to the manufacturer's instructions for each particular substrate condition and as specified.

1. General: Provide barrier coats over incompatible primers, or remove and re-prime. Notify the Construction Manager, in writing, of problems anticipated when using the specified finish coat material with substrates primed by others.

2. Ferrous Metal: Clean ungalvanized ferrous metal surfaces that have not been shop coated. Remove oil, grease, dirt, loose mill scale, and other foreign substances. Use solvent or mechanical cleaning methods that comply with the recommendations of the Steel Structures Painting Council (SSPC).

a. Clean structural steel in accordance with SSPC SP-10.

b. Blast clean steel surfaces as recommended by the coating system manufacturer and in accordance with SSPC SP-6.

c. Treat bare and sandblasted or pickled clean metal with a metal treatment wash coat prior to priming.

d. Touch up shop-applied prime coats that have been damaged and bare areas. Wire brush, solvent clean, and touch up with the same primer as the shop coat.

3. Galvanized Surfaces: Clean galvanized surfaces according to the manufacturer's instructions for the type of surface, metal substrate, and application required.

D. Material Preparation: Carefully mix and prepare materials according to the coating manufacturer's directions.

1. Maintain containers used in mixing and application of coatings according to the manufacturer's directions.

2. Stir materials before applying, to produce a mixture of uniform density; stir as required during application. Do not stir surface film into the material. Remove film and, if necessary, strain the coating material before using.

3. Use only the type of thinners approved by the manufacturer and only within recommended limits.

4. Mix, thin, and handle these materials according to manufacturer's printed label instructions.

5. Do not mix materials beyond the manufacturer's recommended pot life.

E. Tinting: Tint each undercoat a lighter shade, to facilitate identifying each coat where multiple coats of the same material are to be applied. Tint undercoats to match the color of the finish coat.

3.03 APPLICATION

A. General: Apply special coatings by brush, roller, spray, squeegee, or other applicators according to the manufacturer's directions. Use brushes best suited for the material being applied. Use rollers of carpet, velvet back, or high-pile sheep's wool, as recommended by the manufacturer for the material and texture required.

1. Do not apply coatings over dirt, rust, scale, grease, moisture, scuffed surfaces, or conditions detrimental to forming a durable coating film.

2. Coating colors, surface treatments, and finishes are as indicated in Articles 3.03B and 3.06 herein.

3. Provide finish coats compatible with the primers used.

4. The number of coats and film thickness required is the same regardless of the application method. Do not apply succeeding coats until the previous coat has cured as recommended by the manufacturer. Where sanding is required, according to the manufacturer's directions, sand between applications to produce a smooth, even surface.

5. When undercoats or other conditions show through the final coat, apply additional coats until the cured film has a uniform coating finish, color, and appearance. Give special attention to edges, corners, crevices, welds, exposed fasteners, and similar surfaces to ensure that they receive a DFT equivalent to that of flat surfaces.

6. The term "exposed surfaces" includes areas visible when permanent or built-in fixtures, convector covers, covers for finned tube radiation, grilles, and similar components are in place. Extend coatings in these areas, as required, to maintain the system integrity and provide desired protection.

   a. Coat surfaces behind movable equipment and furniture the same as similar exposed surfaces.

   b. Coat the back sides of access panels, removable or hinged covers, and similar hinged items to match exposed surfaces.

   c. Omit primer on metal surfaces that have been shop primed and touch-up painted.

B. Scheduling Coating:

1. Apply first coat to surfaces that have been cleaned, pretreated or otherwise prepared for coating as soon as practicable after preparation and before subsequent surface deterioration.

2. Allow sufficient drying time between successive coats. Do not recoat until the coating has dried so it feels firm and does not deform or feel sticky under moderate thumb pressure, and where applying another coat does not cause the undercoat to lift or lose adhesion.

C. Application Procedures: Apply coatings by brush, roller, spray, or other applicators according to the manufacturer's directions.

1. Brushes: Use brushes best suited for the material applied.

2. Rollers: Use rollers of carpet, velvet back, or high-pile sheep's wool as recommended by the manufacturer for the material and texture required.

3. Spray Equipment: Use spray equipment with orifice size as recommended by the manufacturer for the material and texture required.

D. Adhere to manufacturer's product data sheets concerning the temperature at which coatings shall be applied.

E. Minimum Coating Thickness: Apply each material no thinner than the manufacturer's recommended spreading rate. Provide total DFT of the entire system as recommended by the manufacturer.

F. Prime Coats:

1. Before applying finish coats, apply a prime coat of material, as recommended by the manufacturer, to the material required to be coated or finished that has not been prime coated by others.

2. Recoat primed and sealed substrates where there is evidence of suction spots or unsealed areas in the first coat, to ensure a finish coat with no burn-through or other defects caused by insufficient sealing.

G. Brush Application:

1. Brush out and work brush coats into surfaces in an even film. Eliminate cloudiness, spotting, holidays, laps, brush marks, runs, sags, ropiness, or other surface imperfections. Neatly draw glass lines and color breaks.

2. Apply primers and first coats by brush, unless the manufacturer's instructions permit using mechanical applicators.

H. Mechanical Applications:

1. Use mechanical methods to apply coating when permitted by the manufacturer's recommendations and governing regulations.

2. Wherever using spray application, apply each coat to provide the equivalent hiding of brush-applied coats. Do not double back with spray equipment building up film thickness of two coats in one pass, unless recommended by the manufacturer.

I. Completed Work: Match approved samples for color, texture, and coverage. Remove, refinish, or recoat work not complying with specified requirements.

3.04 CLEANING

A. At the end of each work day, remove rubbish, empty cans, rags, and other discarded materials from the work site.

B. After completing work, clean glass and spattered surfaces. Remove spattered coatings by washing, scraping, or other methods. Do not scratch or damage adjacent finished surfaces.

3.05 PROTECTION

A. Protect work of other trades, whether being coated or not, against damage from coating operation. Correct damage by cleaning, repairing, replacing, and recoating, as acceptable to HART. Leave in an undamaged condition.

1. Provide "WET PAINT" signs to protect newly coated finishes. Remove temporary protective wrappings provided by others to protect their work after completing coating operations.
2. At completion of other trades' construction activities, touch up and restore damaged or defaced coated surfaces.

3.06 COATING SCHEDULE

A. Ferrous Metals: Two-coat engineered siloxane finish.

1. Primer: PPG PMC Amercoat 68HS, 3 to 5 mils DFT
2. Finish Coat: PPG PMC PSX 700, 5 to 7 mils DFT

B. Galvanized Metals:

1. Primer: As recommended by manufacturer
2. Finish Coat: PPG PMC PSX 700, 5 to 7 mils DFT

C. Omit primer for factory or shop-primed metals. Test primers for compatibility with finish coat.

END OF SECTION

SECTION 26 05 00

COMMON WORK RESULTS FOR ELECTRICAL

PART 1 – GENERAL

1.01 SUMMARY

A. Prior to the submission of bids, obtain from the respective utility companies their standards, drawings and specifications for the work to be provided under this Contract. Verify the details, report all conflicts and omissions to HART one month before the submission of bids for interpretation and clarifications; otherwise, work shall be provided at no additional cost to the Contract.

B. Work shall be in accordance with the Contract Documents. Exceptions, changes and deviations from the work intended may be made only with the approval of HART and the concurrence of the respective utility company and/or governmental agency. Submissions for approval shall consist of drawings, written explanations, and reason for request. Changes and additions shall be recorded daily on a copy of the Contract Drawings which shall be maintained at the project site. For utility duct systems, material and construction shall also conform to the referenced Utility Specifications.

C. Description: This Section includes basic requirements specifically applicable and common to components of the electrical work and requirements for the manufacture and installation of electrical service equipment.

D. Section Includes:

1. Electrical equipment coordination and installation
2. Sleeves for Raceways and Cables
3. Sleeve Seals
4. Grout

E. Related Sections:

1. Section 26 05 48 – Vibration and Seismic Controls for Electrical Systems
2. Section 26 05 53 – Identification for Electrical Systems
3. Section 26 08 10 – Testing of Electrical Systems

1.02 REFERENCES

A. ASTM International (ASTM):

1.	ASTM A53/A53M	Standard Specification for Pipe, Steel, Black and Hot-Dipped, Zinc-Coated, Welded and Seamless
2.	ASTM C1107	Standard Specification for Packaged Dry, Hydraulic-Cement Grout (Nonshrink)

B. Hawaii Standard Specifications for Road and Bridge Construction 2005

1. Division 700 - Materials

C. National Electrical Contractors Association:

1. NECA 1 Standard Practices for Good Workmanship in Electrical Construction

D. National Fire Protection Association

1. NFPA 70 National Electrical Code

E. Underwriters Laboratories (UL):

1. UL 50 UL Standard for Safety Enclosures for Electrical Equipment, Non-Environmental Considerations

F. Applicable rules, standards and specifications of the following associations and organizations shall apply to materials and workmanship. Should there be a conflict in the requirements, the more stringent rule, standard and specification shall apply.

1. American National Standards Institute (ANSI)
2. Edison Electrical Institute (EEI)
3. Illuminating Engineer Society (IES)
4. National Board of Fire Underwriters (NBFU)
5. National Electrical Manufacture's Association (NEMA)
6. National Fire Protection Association (NFPA)
7. Underwriter's Laboratories, inc. (UL)

G. References cited in the Specification Sections of the 26 00 00 series and of the 33 00 00 series shall be the current edition being enforced by the Authority and/or Agency Having Jurisdiction.

1.03 DEFINITIONS

A. EPDM: Ethylene-propylene-diene terpolymer rubber.

B. NBR: Acrylonitrile-butadiene rubber.

1.04 SUBMITTALS

A. General: Refer to Section 7.7 – Submittal Procedures, and Section 7.8 – Shop Drawings, Product Data, and Samples, for submittal requirements and procedures.

B. Product Data: For sleeve seals.

1.05 QUALITY ASSURANCE

A. General: Refer to Section 7.10 – Quality Assurance, for quality assurance requirements and procedures.

B. Testing Agency Qualifications: Comply with Section 26 08 10 – Testing of Electrical Systems.

C. Electrical Components, Devices, and Accessories: Listed and labeled as defined in NFPA 70, by a qualified testing agency, and marked for intended location and application.

D. Comply with NFPA 70.

1.06 COORDINATION

A. Coordinate sequencing of dry utility (electrical and communications) work, roadway lighting work, parking area lighting and traffic signal with the overall utility relocation and roadway improvement work by the General Contractor. Contact and coordinate with the respective utility companies to allow sufficient time for installation of their cables, facilities and equipment and for scheduling of necessary service outages. Prior to the start of any construction, Contractor shall contact each utility company impacted by this project to ascertain the time required for their relocation work after: roadway improvements wet utility relocations have been constructed, inspected and accepted; and the replacement duct system has been constructed, inspected and accepted for underground relocation work and incorporate the necessary time into the project schedule.

B. Coordinate arrangement, mounting, and support of electrical equipment:

1. To allow maximum possible headroom, unless specific mounting heights that reduce headroom are indicated.

2. To provide for ease of disconnecting the equipment with minimum interference to other installations.

3. To allow right of way for piping and conduit installed at required slope.

4. So connecting raceways, cables, wireways, cable trays, and busways will be clear of obstructions and of the working and access space of other equipment.

C. Coordinate installation of required supporting devices and set sleeves in cast-in-place concrete, masonry walls, and other structural components as they are constructed.

D. Coordinate location of access panels and doors for electrical items that are behind finished surfaces or otherwise concealed.

E. Coordinate sleeve selection and application with selection and application of firestopping.

1.07 CONSTRUCTION REQUIREMENTS

A. General.

1. The Contractor shall, in performing required excavation and backfill, exercised due care to avoid disturbing existing facilities. He shall remove and dispose of all demolished or excess material from the project site.

2. Upon completion of the work, the Contractor shall submit an “As-Built” or corrected plan showing in detail therein all construction changes, including changes made to the vertical and horizontal curves of utility ductlines.

3. Before bidding, the Contractor shall visit the project site, carefully review each section of the Specifications and all Contract Drawings and obtain and review the standards, specifications, and drawings of the local utility companies. The Contractor shall report any error, conflicts or omissions to the Engineer/Contracting Officer at least one week before submission of bids for interpretation and clarification. If errors and omissions are not reported, the Contractor shall provide necessary work, at no additional cost to the Contract, to properly complete the intent of the Contract Documents.

4. The Contractor shall coordinate with and make detailed arrangement for work by utility companies pertaining to this contract. Payment to utility companies for their work shall be by HART. See Specification Section 33 70 00 and 33 80 00 for list of "utility companies".

5. Electric and telephone utility cables and equipment shall be by the respective utility companies. Communications cables for NETCOM and NCTAMS shall be provided under this contract. Cable television cables shall be by the cable television utility.

6. Overhead electric cables and equipment and underground cables and equipment for the relocated NAVFAC-HAW 11.5 kV electrical lines shall be provided under this contract.

7. Underground cables and equipment for the relocated Department of Transportation Airports Division12 kV electrical lines shall be provided under this contract.

B. Existing utilities are shown on the drawings in approximate locations for the convenience of the Contractor. It is not the intention of the plans to imply that all existing utilities are drawn and located, and the fact that any utility is not shown on the drawings shall not relieve the Contractor of their responsibility under this Section to ascertain the location of all existing utilities which may be subject to damage by the construction under this Contract. Use of "One Call" and/or similar utility location services does not constitute sufficient due diligence for locating existing utilities. Contractor shall employ such methods as ground penetrating radar and non-destructive digging ("pot-holing") equipment to locate existing underground utilities. The Contractor shall:

1. Support and protect all existing civil, electrical and telecommunications underground during construction.

2. Notify the owners of the respective utility facility immediately of any damage to their facility caused by construction under this contract.

3. Reconstruct, at the Contractor's expense, damaged portions of the utility system in accordance with the requirements and specification of the respective utility facility owner.

4. In accordance with OSHA and HIOSH, provide safety equipment, procedures and clearances when performing construction work in the proximity of existing overhead utility lines.

C. Contractor shall verify ductline requirements, duct entry configurations and their locations for each utility company manhole and handhole, with the respective utility company prior to fabrication/installation.

D. Contractor shall make detailed arrangement for work by utility companies pertaining to this Contract. Payment to utility companies for their work shall be by HART.

1.09 RESTORATION OF STREETS AND OTHER IMPROVEMENTS

A. Streets, sidewalks, curbs, gutters, traffic detection loops and other improvements of the State, private owners, U. S. Department of Defense and those of the City and County which are within the State right-of-way and are maintained by the State and which are damaged by rearrangements and relocations to the electric, cable television and telecommunications systems shall be restored by the Contractor to their original condition. Existing concrete pavement disturbed by the Contractor shall be removed and reconstructed at the pavement scorelines or construction joints. Spot repairing of the concrete pavements is not allowed. Materials and workmanship shall conform to the applicable sections in these specifications.

B. Repairing of existing City streets and other improvements not maintained by the State and where such work is called for on the plans, inside and outside of the right-of-way, publicly or privately owned, which are damaged by rearrangements and relocations to the electric, cable television and telecommunications systems shall be restored by the Contractor to their original condition or better. Materials and workmanship shall conform to the STANDARD SPECIFICATIONS FOR PUBLIC WORKS CONSTRUCTION, SEPTEMBER 1986, and as amended, of the City and County of Honolulu

C. All disturbed unpaved surfaces shall be backfilled and graded to match the surrounding areas, and sodded areas shall be replanted with the same type of grass. Fences and other improvements shall be restored to their original condition.

1.08 QUALITY ASSURANCE

A. General: Refer to Section7.10– Quality Assurance, for quality assurance requirements and procedures.

B. Electrical Components, Devices, and Accessories: Listed and labeled as defined in NFPA 70, Article 100, by a testing agency acceptable to authorities having jurisdiction, and marked for intended use.

C. Comply with NFPA 70.

PART 2 – PRODUCTS

2.01 SLEEVES FOR RACEWAYS AND CABLES

A. Steel Pipe Sleeves: ASTM A53/A 53M, Type E, Grade B, Schedule 40, galvanized steel, plain ends.

B. Cast-Iron Pipe Sleeves: Cast or fabricated wall pipe, equivalent to ductile-iron pressure pipe, with plain ends and integral waterstop, unless otherwise indicated.

C. Coordinate sleeve selection and application with selection and application of firestopping.

D. Sleeves for Rectangular Openings:

1. Galvanized sheet steel

2. Minimum metal thickness:
   a. For sleeve cross-section rectangle perimeter less than 50 inches and no side more than 16 inches, thickness shall be 0.052 inch.
   b. For sleeve cross-section rectangle perimeter equal to, or more than, 50 inches and one or more sides equal to, or more than, 16 inches, thickness shall be 0.138 inch.

2.02 SLEEVE SEALS

A. Description: Modular sealing device, designed for field assembly, to fill annular space between sleeve and raceway or cable.

1. Sealing Elements: EPDM interlocking links shaped to fit surface of cable or conduit. Include type and number required for material and size of raceway or cable.

2. Pressure Plates: Stainless steel. Include two for each sealing element.

3. Connecting Bolts and Nuts: Stainless steel of length required to secure pressure plates to sealing elements. Include one for each sealing element.

2.03 GROUT

A. Nonmetallic, Shrinkage-Resistant Grout: ASTM C1107, factory-packaged, nonmetallic aggregate grout, noncorrosive, nonstaining, mixed with water to consistency suitable for application and a 30-minute working time.

PART 3 – EXECUTION

3.01 COMMON REQUIREMENTS FOR ELECTRICAL INSTALLATION

A. Comply with NECA 1.

B. Measure indicated mounting heights to bottom of unit for suspended items and to center of unit for wall-mounting items.

C. Headroom Maintenance: If mounting heights or other location criteria are not indicated, arrange and install components and equipment to provide maximum possible headroom consistent with these requirements.

D. Equipment: Install to facilitate service, maintenance, and repair or replacement of components of both electrical equipment and other nearby installations. Connect in such a way as to facilitate future disconnecting with minimum interference with other items in the vicinity.

E. Right-of-Way: Give to piping systems installed at a required slope.

3.02 INSTALLATION

A. Comply with mounting and anchoring requirements specified in Section 26 05 48 – Vibration and Seismic Controls for Electrical Systems.

B. Temporary Lifting Provisions: Remove temporary lifting eyes, channels, and brackets and temporary blocking of moving parts from enclosures and components.

C. Maintain minimum and maximum height restrictions and clearances for meter sockets, utility splice enclosures and metering instrument enclosures.

D. Comply with NECA 1.

3.03 SLEEVE INSTALLATION FOR ELECTRICAL PENETRATIONS

A. Electrical penetrations occur when raceways, cables, wireways, cable trays, or busways penetrate concrete slabs, concrete or masonry walls, or fire-rated floor and wall assemblies.

B. Coordinate sleeve selection and application with selection and application of firestopping.

C. Concrete Slabs and Walls: Install sleeves for penetrations unless core-drilled holes or formed openings are used. Install sleeves during erection of slabs and walls.

D. Use pipe sleeves unless penetration arrangement requires rectangular sleeved opening.

E. Fire-Rated Assemblies: Install sleeves for penetrations of fire-rated floor and wall assemblies unless openings compatible with firestop system used are fabricated during construction of floor or wall.

F. Cut sleeves to length for mounting flush with both surfaces of walls.

G. Extend sleeves installed in floors 2 inches above finished floor level.

H. Size pipe sleeves to provide 1/4-inch annular clear space between sleeve and raceway or cable unless sleeve seal is to be installed or unless seismic criteria require different clearance.

I. Seal space outside of sleeves with grout for penetrations of concrete and masonry. Promptly pack grout solidly between sleeve and wall so no voids remain. Tool exposed surfaces smooth; protect grout while curing.

J. Seal space outside of sleeves with approved joint compound for gypsum board assemblies.

K. Interior Penetrations of Non-Fire-Rated Walls and Floors: Seal annular space between sleeve and raceway or cable, using joint sealant appropriate for size, depth, and location of joint.

L. Fire-Rated-Assembly Penetrations: Maintain indicated fire rating of walls, partitions, ceilings, and floors at raceway and cable penetrations. Install sleeves and seal raceway and cable penetration sleeves with firestop materials.

M. Roof-Penetration Sleeves: Seal penetration of individual raceways and cables with flexible boot-type flashing units applied in coordination with roofing work.

N. Aboveground, Exterior-Building Wall Penetrations: Seal penetrations using steel pipe sleeves and mechanical sleeve seals. Select sleeve size to allow for 1-inch annular clear space between pipe and sleeve for installing mechanical sleeve seals.

O. Underground, Exterior-Building Wall Penetrations: Install cast-iron pipe sleeves. Size sleeves to allow for 1-inch annular clear space between raceway or cable and sleeve for installing mechanical sleeve seals.

P. For underground utility handhole, vault, manhole and maintenance hole penetrations materials see specification Sections 33 70 00 and 33 80 00.

3.04 SLEEVE-SEAL INSTALLATION

A. Install to seal exterior and underground wall penetrations.

B. Use type and number of sealing elements recommended by manufacturer for raceway or cable material and size. Position the raceway or cable in center of sleeve. Assemble mechanical sleeve seals and install in annular space between raceway or cable and sleeve. Tighten bolts against pressure plates that cause sealing elements to expand and make watertight seal.

C. See specification Sections 3370 00 and 33 80 00 for utility handhole, vault, manhole and maintenance hole penetration and sleeve installation.

3.05 FIRESTOPPING

A. Apply firestopping to penetrations of fire-rated floor and wall assemblies for electrical installations to restore original fire-resistance rating of assembly.

END OF SECTION

SECTION 26 05 19

LOW-VOLTAGE ELECTRICAL POWER CONDUCTORS AND CABLES

PART 1 – GENERAL

1.01 SUMMARY

A. Description: This Section includes the requirements for the manufacture and installation of low voltage power conductors and cables used for electrical systems in the Work.

B. Section Includes:

1. Conductors and Cables

C. Related Sections:

1. Section 26 05 00 – Common Work Results for Electrical
2. Section 26 05 53 – Identification for Electrical Systems
3. Section 26 08 10 – Testing of Electrical Systems

1.02 REFERENCES

A. National Electrical Manufacturers Association (NEMA):

1. NEMA WC 70 — Nonshielded Power Cables Rated 2000 Volts or Less for the Distribution of Electrical Energy

B. InterNational Electrical Testing Association (NETA) Acceptance Testing Specifications

C. National Fire Protection Association (NFPA):

1. NFPA 70 — National Electrical Code
2. NFPA 130 — Standard for Fixed Guideway Transit and Passenger Rail Systems

D. Underwriters Laboratories (UL):

1. UL 486A-B — UL Standard for Safety for Wire Connectors

E. Hawaii Standard Specifications (HSS)

1. Section 760 – Roadway and Sign Lighting Systems Materials

1.03 SUBMITTALS

A. General: Refer to Section 7.7 – Submittal Procedures, and Section 7.8 – Shop Drawings, Product Data, and Samples, for submittal requirements and procedures.

B. Field quality control test reports.

1.04 QUALITY ASSURANCE

A. General: Refer to Section 7.10 – Quality Assurance, for quality assurance requirements and procedures.

B. Testing Agency Qualifications: Comply with Section 26 08 10 – Testing of Electrical Systems.

C. Electrical Components, Devices, and Accessories: Listed and labeled as defined in NFPA 70, Article 100, by a testing agency acceptable to authorities having jurisdiction, and marked for intended use.

D. Comply with NFPA 70.

E. Comply with NFPA 130.

PART 2 – PRODUCTS

2.01 CONDUCTORS AND CABLES

A. Copper Conductors: Comply with NEMA WC 70.

B. Conductor Insulation:

1. Comply with NFPA 130 wiring requirements for types used in Passenger Station and Trainway applications.

2. Comply with NEMA WC 70 for Types RHW-USE, THW, THHN-THWN, and XHHW. See Section 26 56 19 for additional requirements pertaining to City and County roadway lighting system conductors.

C. Multiconductor Cable: Comply with NEMA WC 70 for armored cable, Type AC metal-clad cable and Type MC with ground wire.

2.02 CONNECTORS AND SPLICES

A. Description: Factory-fabricated connectors and splices of size, ampacity rating, material, type, and class for application and service indicated.

2.03 SLEEVES AND SEALS FOR CABLES

A. Comply with Section 26 05 00 – Common Work Results for Electrical.

PART 3 – EXECUTION

3.01 CONDUCTOR MATERIAL APPLICATIONS

A. Aluminum conductors not permitted.

B. Feeders: Copper. Solid for No. 10 AWG and smaller; stranded for No. 8 AWG and larger.

C. Branch Circuits: Copper. Solid for No. 10 AWG and smaller; stranded for No. 8 AWG and larger.

3.02 CONDUCTOR INSULATION AND MULTICONDUCTOR CABLE APPLICATIONS AND WIRING METHODS

A. Passenger Stations Applications: Comply with NFPA 130 wiring requirements.

B. Trainway Applications: Comply with NFPA 130 wiring requirements.

C. Other Applications Comply with the following:

1. Service Entrance: Type RHW-USE single conductors in raceway.
2. Exposed Feeders: Type RHW-USE, single conductors in raceway.
3. Feeders Concealed in Concrete, below Slabs-on-Grade, and Underground: Type RHW-USE, single conductors in raceway.
4. Exposed Branch Circuits, Including in Crawlspaces: Type RHW-USE, single conductors in raceway.
5. Branch Circuits Concealed in Concrete, below slabs-on-grade, and underground: Type RHW-USE, single conductors in raceway.
6. Feeders and Branch Circuits installed in Cable Tray: Type AC armored cable.
7. Cord Drops and Portable Appliance Connections: Type SO, hard service cord with stainless-steel, wire-mesh, strain relief device at terminations to suit application.

3.03 INSTALLATION OF CONDUCTORS AND CABLES

A. Conceal cables in finished walls, ceilings, and floors, unless otherwise indicated.

B. Use manufacturer-approved pulling compound or lubricant where necessary; compound used must not deteriorate conductor or insulation. Do not exceed manufacturer's recommended maximum pulling tensions and sidewall pressure values.

C. Use pulling means, including fish tape, cable, rope, and basket-weave wire/cable grips, that will not damage cables or raceway.

D. Install exposed cables parallel and perpendicular to surfaces of exposed structural members, and follow surface contours where possible.

E. Support cables according to Section 26 05 29 – Hangars and Supports for Electrical Systems.

F. Identify and color-code conductors and cables according to Section 26 05 53 – Identification for Electrical Systems.

G. Tighten electrical connectors and terminals according to manufacturer's published torque-tightening values. If manufacturer's torque values are not indicated, use those specified in UL 486A and UL 486B.

H. Make splices and taps that are compatible with conductor material and that possess equivalent or better mechanical strength and insulation ratings than unspliced conductors.

I. Wiring at Outlets: Install conductor at each outlet, with at least 12 inches of slack.

3.04 SLEEVE AND SEAL INSTALLATION FOR ELECTRICAL PENETRATIONS

A. Comply with Section 26 05 00 – Common Work Results for Electrical.

3.05 FIRESTOPPING

A. Comply with Section 26 05 00 – Common Work Results for Electrical.

3.06 FIELD QUALITY CONTROL

A. Testing Agency: Comply with Section 26 08 10 – Testing of Electrical Systems.

B. Perform tests and inspections and prepare test reports.

C. Tests and Inspections:

1. After installing conductors and cables and before electrical circuitry has been energized, test service entrance and feeder conductors, for compliance with requirements.

2. Perform each visual and mechanical inspection and electrical test stated in NETA Acceptance Testing Specification. Certify compliance with test parameters.

3. Infrared Scanning: After Substantial Completion, but not more than 60 days after Final Acceptance, perform an infrared scan of each splice in cables and conductors No. 3 AWG and larger. Remove box and equipment covers so splices are accessible to portable scanner.

   a. Instrument: Use an infrared scanning device designed to measure temperature or to detect significant deviations from normal values. Provide calibration record for device.

   b. Record of Infrared Scanning: Prepare a certified report that identifies splices checked and that describes scanning results. Include notation of deficiencies detected, remedial action taken, and observations after remedial action.

D. Test Reports: Prepare a written report to record the following:

1. Test procedures used.

2. Test results that comply with requirements.

3. Test results that do not comply with requirements and corrective action taken to achieve compliance with requirements.

E. Remove and replace malfunctioning units and retest as specified above.

END OF SECTION

SECTION 26 05 23

UNDERGROUND DUCTS AND RACEWAYS FOR ELECTRICAL SYSTEMS

PART 1 – GENERAL

1.01 SUMMARY

A. Description: This Section includes the requirements for providing underground ductbanks. Each ductbank consists of raceways and fittings, concrete, and reinforcement steel. Ductbank construction includes excavation, bedding material, preparation, and backfill. Also included are direct-buried raceways and raceways emerging from ductbanks. Included herewith are ductbanks for State Department of Transportation Roadway light systems and City and County of Honolulu Roadway light systems.

B. Section Includes:

1. Preparation
2. Construction
3. Field Quality Control

C. Related Sections:

1. Section 03 11 00 – Concrete Forming
2. Section 03 20 00 – Concrete Reinforcing
3. Section 03 30 00 – Cast-In-Place Concrete
4. Section 26 05 33 – Raceway and Boxes for Electrical Systems
5. Section 31 20 00 – Earth Moving

1.02 SUBMITTALS

A. General: Refer to Section 7.7 – Submittal Procedures, and Section 7.8 – Shop Drawings, Product Data, and Samples, for submittal requirements and procedures.

B. Submit the following information in accordance with the requirements of Section 7.7 – Submittal Procedures, except as modified herein.

1. Product Data:
   a. Raceway spacers
   b. Raceway identification tags
   c. Pull cord
2. Shop drawings

1.03 QUALITY ASSURANCE

A. General: Refer to Section 7.10 – Quality Assurance, for quality assurance requirements and procedures.

PART 2 – PRODUCTS

2.01 COMPONENTS

A. Raceway: Provide raceways including corrosion protection, fittings, and labels in conformance with Section 26 05 33 – Raceway and Boxes for Electrical Systems. Surface mounted raceways for above-grade use by State Roadway Lighting Systems and City and County Roadway Lighting Systems shall be PVC-coated, galvanized rigid steel conduit. Raceways complying with Paragraph B. below may be used in above-grade applications only where not exposed to damage, i.e. within an enclosure or building interior.

B. Conduits: Conduits for direct buried roadway lighting systems shall utilize PVC Schedule 80 conduit. Conduits for concrete-encased roadway lighting duct systems shall utilize PVC Schedule 40 conduit.

C. Raceway Spacers:

1. Provide plastic, lock together type raceway and conduit spacers sized to create clear space between raceways as indicated on the Design Plans.
2. Submit product data for the raceway and conduit spacers.
3. Acceptable manufacturers: Carlon, PW pipe, or approved equal.

D. Tags are specified in Section 26 05 53 – Raceway and Boxes for Electrical Systems.

E. Raceway Identification Tags:

1. Brass tags inscribed or stamped with the raceway number and having a sunlight resistant nylon tie for attaching the tag to the raceway.
2. Submit product data for the raceway identification tags.

F. Pull Cord:

1. Material: Polypropylene cord with a minimum breaking strength of 200 lbs.
2. Submit product data for the pull cord

G. Warning tape also identified in Section 26 05 53 – Raceway and Boxes for Electrical Systems.

H. Detectable Warning Tape: Provide detectable warning tape in accordance with the requirements specified in Section 31 20 00 – Earth Moving.

I. Concrete:

1. Provide ductbank concrete encasement in conformance with Section 03 30 00 – Cast-In-Place Concrete, and the following:
   a. 28-day strength: 2,500 psi, minimum, unless noted on the Design Plans.
   b. Slump: 7-inch, within a tolerance of 1 inch.
2. Red Concrete: Make red concrete by adding iron oxide to the concrete mix in a ratio of 100 pounds of iron oxide per eight cubic yards of concrete.

J. Concrete Reinforcement: Provide steel reinforcement for the concrete encasement in accordance with Section 03 20 00 – Concrete Reinforcing.

PART 3 – EXECUTION

3.01 PREPARATION

A. Submit shop drawings of the underground electrical ductbank.

B. Before beginning to excavate for underground electrical ductbanks, employ a licensed surveyor to survey the work site in accordance with General Conditions requirements, and establish the locations of existing underground utilities.

C. Coordinate installation of underground conduits with other construction work.

D. Maintain existing utilities in operation, unless otherwise directed by the HART.

E. Protect and maintain new and existing benchmarks and other reference points necessary for the completion of the Work.

3.02 CONSTRUCTION

A. Trench Excavation:

1. Excavate trenches for underground electrical ductbanks in accordance with Section 31 20 00 – Earth Moving, but no wider than necessary to construct the nominal concrete encased ductbank.
   a. When trench walls are stable, use the walls of the trench as concrete forms for concrete encasement.
   b. Where concrete formwork is required to support the trench, construct the formwork in accordance with Section 03 11 00 – Concrete Forming.
2. Provide a compacted base under the duct bank.
3. Clean excavations prior to raceway and concrete placement.
   a. Clean trenches, dewater, and adjust clearances as directed to obtain the minimum concrete dimensions shown on the Design Plans.

B. Underground electrical ductbank includes electrical raceway, spacers, pull cords, raceway identification tags, detectable warning tape, surveying and survey markers, and the required type and minimum amount of concrete encasement.

C. Raceway Type:

1. Provide the type of raceway indicated on the Design Plans, or as specified herein.
   a. Use High-Density Polyethylene (HDPE) innerduct for underground electrical ductbanks branching off from the fiber optic backbone.
2. Polyvinyl Chloride (PVC) Conduit Runs:
   a. Use galvanized rigid steel conduit (GRSC) or PVC/GRSC for ells transitioning from underground duct runs to surface mounted and/or exposed conditions.
      1) Minimum permissible bend radius is 36 inches.
   b. If the bend radius is greater than 6 feet (90 degrees of bend in 9.5 feet of conduit length) in PVC conduit runs, use Schedule 40 PVC conduit for bends.
      1) Bends in PVC conduit may be factory ells or field bent.

a) For field bends less than 100 feet in radius, hot form the bends using only a heater recommended by the conduit manufacturer.
   i) Use conduit plugs during bending for conduit 2 inches and larger.
   ii) Remove plugs only after conduit has cooled.
b) For field bends greater than100 feet in radius, cold form the bends.
   i) When placing cold bends, maintain adequate spacing from the inside of the bend to excavation walls for the required 3 inches of concrete.

3. HDPE Innerduct (for use only when installed within specified Conduit):
   a. Provide a continuous length of smooth walled HDPE innerduct, ribbed inside, and coiled on a reel with a low friction internal surface containing no welds or joints.
      1) Minimum permissible bend radius for HDPE innerduct is 20 inches.
      2) Provide innerduct marked per the schedule shown on the Design Plans.
   b. Provide four 12-mm MicroDucts within the HDPE innerduct, unless otherwise indicated.

D. Installing Raceway:

1. Arrange conduits as shown on the Design Plans using conduit spacers as required.
   a. Stagger conduit joints by rows and layers to provide a duct line having maximum strength.
   b. Separate conduits by the minimum concrete thickness indicated on the Design Plans.
   c. Consider the bending radii indicated on Design Plans and specified herein as minimums, unless otherwise noted.
   d. Make minor changes in location or cross-section as necessary to avoid obstructions or conflicts.
   e. Where conduit in a ductbank terminates in a building, install the conduit under the building as a continuous ductbank.
   f. Where conduit runs cannot be installed as shown because of conditions not discoverable prior to trenching, refer the condition to the HART for direction before further work is performed.

2. For ducts that terminate in pull boxes, manholes, and handholes, provide end bells or terminators.

3. Slope all raceway to manholes or handholes for drainage and away from buildings.
   a. Raceway slope: 3 inches per 100 feet, minimum.

4. Cap all raceway ends.
   a. Swab and mandrell conduits prior to capping.

5. Install and secure a pull cord at each end of raceway installed for future use.
   a. Tie off the cord to the end cap.

6. Identify ends of each raceway by attaching raceway identification tags inscribed or stamped with the raceway number shown on the Design Plans.
   a. Attach the raceway identification tags to the raceway with a sunlight resistant nylon tie.
   b. If the Design Plans do not show a raceway numbering scheme, develop a scheme, subject to approval by the HART.
7. During construction, protect partially completed duct lines and stub-ups from the entrance of debris such as mud, sand, and dirt by means of suitable conduit plugs.
8. Secure conduits to prevent displacement during concrete encasement or earth backfilling.

E. Placing Concrete Encasement:

1. Limit concrete encasement to the neat lines shown on the Design Plans.
   a. Take responsibility for coordinating placement of the concrete with other work.
   b. If the ductbank conflicts with other work, relocate it at no additional expense to the HART.
2. Construct all ductbanks that encase electrical power conduits, such as conduits for the contact rail system, from red concrete.
   a. Use red concrete for all 15 kV and higher voltage ductbanks and traction electrification (TE) ductbanks for both traction power positive and negative return.
3. Place concrete in accordance with Section 03 30 00 – Cast-In-Place Concrete.
   a. When placing concrete around theconduits, adjust the delivery chute so the direct fall distance of the concrete into the trench is 2 feet or less.
   b. Use a splashboard to divert the flow of concrete away from the trench sides, and avoid dislodging soil and stones.
4. To minimize plastic conduit expansion and contraction as concrete is placed and cured; always encase the conduit from one end of the duct section toward the other end to allow the free end to move while the concrete encasement is placed.
   a. Never place the encasement from each end of the section toward the center.
   b. Place concrete continuously between manholes, handholes, and pullboxes.
5. If the placement stops for more than two hours, place 8-foot lengths of Number 4 steel reinforcing bars longitudinally around the perimeter of the concrete envelope on 12-inch centers at the end of the ductbank, and provide 2 inches of concrete cover, minimum.
   a. Provide half of each 8-foot length in each pour.
6. Where concrete encased ductbanks are terminated for future extension, stub out and cap all conduits at least 1 foot beyond the end of ductbank concrete.
   a. Provide temporary protection to ends of protruding conduit from damage when exposed.
   b. To make extending the ductbank in the future easier, stagger the end of each horizontal row of conduit beginning at the top row of raceway nearest to the end of concrete.

c. Extend reinforcement steel as described in Article 3.02E.5 herein, to a point beyond all of the conduit ends, leaving at least 4 feet of each rebar embedded in the ductbank concrete.

F. Mandrel conduits and provide seals in accordance with Section 26 05 33 – Raceway and Boxes for Electrical Systems.

1. Mandrel ductbanks containing conduits prior to and after concrete encasement but before backfilling. Should mandrel testing reveal obstructions or burrs, replace the damaged section of the ductbank, at no additional cost to the project, prior to proceeding with the next construction activity.

2. Final mandrel testing is required before acceptance of any ductbank. All deficient items indicated by the State, City and HART's inspectors shall be repaired and/or replaced to the satisfaction of the respective inspectors at no additional cost to the Project.

G. Trench Backfilling:

1. Prior to backfilling, survey and record the location of the end of the ductbank as determined by surveying from an existing survey station that will remain at least until Contract completion.
   a. Submit a plan to the HART for acceptance that indicates how surveying will be carried out, including survey stations to be used to determine ductbank end locations prior to beginning any such surveying.
   b. Provide copies of all survey data to the HART.

2. Install detectable warning tape 12 inches above ductbanks, or as indicated on the Design Plans.

3. Provide a minimum cover of 36 inches over underground ductbank containing contact rail system raceway.
   a. Provide a minimum cover of 36 inches over all other underground ductbank, unless otherwise indicated.

4. Prior to completion of the Contract, re-survey all ductbank endpoints, and provide 4-inch by 4-inch by 6-foot long treated wood posts painted white and placed to mark the ductbank termination locations.
   a. Permanently label each such post with brass screws and a brass tag stamped with the ductbank number, the ductbank burial depth, and the coordinates per the ductbank schedule.
   b. Install the marker post 2 feet into the ground and centered between tracks where applicable.

3.03 FIELD QUALITY CONTROL

A. Notify the HART 7 days before placing concrete.

1. Before placing concrete encasement, have the installed raceway and excavation inspected and accepted by the HART.

2. Place concrete the same day as HART's approval.

END OF SECTION

This page intentionally left blank.

SECTION 26 05 26

GROUNDING AND BONDING FOR ELECTRICAL SYSTEMS

PART 1 – GENERAL

1.01 SUMMARY

A. Description: This Section includes methods and materials for grounding electrical systems and equipment.

B. Section Includes:

1. Conductors
2. Connectors
3. Grounding Electrodes
4. Grounding Bus Bars

C. Related Sections:

1. Section 26 05 33 – Raceway and Boxes for Electrical Systems
2. Section 26 08 10 – Testing of Electrical Systems

1.02 REFERENCES

A. American National Standards Institute / InterNational Electrical Testing Association (ANSI/NETA):

1. Standard for Maintenance Testing Specifications (MTS)

B. ASTM International (ASTM):

1.	ASTM B3	Standard Specification for Soft or Annealed Copper Wire
2.	ASTM B8	Standard Specification for Concentric-Lay-Stranded Copper Conductors, Hard, Medium-Hard, or Soft
3.	ASTM B33	Standard Specification for Tinned Soft or Annealed Copper Wire for Electrical Purposes

C. Code of Federal Regulations (CFR):

1.	29 CFR 1910.7	Occupational Safety and Health Standards

D. Institute of Electrical and Electronics Engineers, Inc. (IEEE):

1.	IEEE C2	National Electrical Safety Code (NESC)
2.	IEEE 81	IEEE Guide for Measuring Earth Resistivity, Ground Impedance, and Earth Surface Potentials of a Ground System Part 1: Normal Measurements

E. InterNational Electrical Testing Association (NETA):

1. NETA Publication Acceptance Testing Specifications (ATS)

F. National Fire Protection Association (NFPA):

1. NFPA 70 National Electrical Code
2. NFPA 780 Standard for the Installation of Lightning Protection Systems

G. Underwriters Laboratories, Inc. (UL):

1. UL 467 UL Standard for Safety Grounding and Bonding Equipment
2. UL 96 UL Standard for Safety Lightning Protection Components

1.03 SUBMITTALS

A. General: Refer to Section 7.7 – Submittal Procedures, and Section 7.8 – Shop Drawings, Product Data, and Samples, for submittal requirements and procedures.

B. Product Data: For each type of product indicated.

C. Other Informational Submittals: Plans showing dimensioned as-built locations of grounding features specified in Field Quality Control herein, including the following:

1. Test wells
2. Ground rods
3. Ground rings
4. Grounding arrangements and connections for separately derived systems
5. Grounding for sensitive electronic equipment

D. Qualification Data: For testing agency and testing agency's field supervisor.

E. Field quality control test reports.

F. Operation and Maintenance Data: For grounding to include the following in emergency, operation, and maintenance manuals:

1. Instructions for periodic testing and inspection of grounding features at test wells and grounding connections for separately derived systems based on ANSI/NETA Standard for Maintenance Testing Specifications (MTS).

1.04 QUALITY ASSURANCE

A. General: Refer to Section 7.10 – Quality Assurance, for quality assurance requirements and procedures.

B. Testing Agency Qualifications: Comply with Section 26 08 10 – Testing of Electrical Systems.

1. Testing Agency's Field Supervisor: Person currently certified by the NETA to supervise on-site testing specified in Part 3.

C. Electrical Components, Devices, and Accessories: Listed and labeled as defined in NFPA 70, Article 100, by a testing agency acceptable to authorities having jurisdiction, and marked for intended use.

D. Comply with UL 467 for grounding and bonding materials and equipment.

PART 2 – PRODUCTS

2.01 CONDUCTORS

A. Insulated Conductors: Copper or tinned-copper wire or cable insulated for 600 V unless otherwise required by applicable code or authorities having jurisdiction.

B. Bare Copper Conductors:

1. Solid Conductors: ASTM B3.
2. Stranded Conductors: ASTM B8.
3. Tinned Conductors: ASTM B33.
4. Bonding Cable: 28 kcmil, 14 strands of No. 17 American Wire Gage (AWG) conductor, 1/4-inch in diameter.
5. Bonding Conductor: No. 4 or No. 6 (AWG), stranded conductor.
6. Bonding Jumper: Copper tape, braided conductors, terminated with copper ferrules; 1-5/8 inch wide and 1/16-inch thick.
7. Tinned Bonding Jumper: Tinned-copper tape, braided conductors, terminated with copper ferrules; 1-5/8 inch wide and 1/16-inch thick.

C. Bare Grounding Conductor and Conductor Protector for Wood Poles:

1. No. 4 AWG minimum, soft-drawn copper.
2. Conductor Protector: Half-round polyvinyl chloride or wood molding. If wood, use pressure-treated fir or cypress or cedar.

D. Grounding Bus: Rectangular bars of annealed copper, 1/4 inch by 2 inches in cross section, unless otherwise indicated; with insulators.

2.02 CONNECTORS

A. Listed and labeled by a nationally recognized testing laboratory acceptable to authorities having jurisdiction for applications in which used, and for specific types, sizes, and combinations of conductors and other items connected.

B. Bolted Connectors for Conductors and Pipes: Copper or copper alloy, bolted pressure-type, with at least two bolts.

1. Pipe Connectors: Jaw type, sized for pipe.

C. Welded Connectors: Exothermic-welding kits of types recommended by kit manufacturer for materials being joined and installation conditions.

2.03 GROUNDING ELECTRODES

A. Ground Rods: Copper-clad steel; 3/4 inch by 10 feet.

PART 3 – EXECUTION

3.01 APPLICATIONS

A. Conductors: Install solid conductor for No. 10 AWG and smaller, and stranded conductors for No. 8 AWG and larger, unless otherwise indicated.

B. Buried Grounding Conductors: Install bare tinned-copper conductor, No. 2/0 AWG minimum.

1. Bury at least 24 inches below grade.

2. Duct Bank Grounding Conductor: Bury 12 inches above duct bank when indicated as part of duct bank installation.

C. Isolated Grounding Conductors: Green-colored insulation with continuous yellow stripe. On feeders with isolated ground, identify grounding conductor where visible to normal inspection, with alternating bands of green and yellow tape, with at least three bands of green and two bands of yellow.

D. Grounding Bus Bars: Install in electrical, communication, and telephone equipment rooms, in rooms housing service equipment, and elsewhere as indicated.

1. Install bus on insulated spacers 1 inch, minimum, from wall 6 inches above finished floor, unless otherwise indicated.

2. Where indicated on both sides of doorways, route bus up to top of door frame, across top of doorway, down to specified height above floor, and connect to horizontal bus.

E. Conductor Terminations and Connections:

1. Pipe and Equipment Grounding Conductor Terminations: Bolted connectors.

2. Underground Connections: Welded connectors, except at test wells and as otherwise indicated.

3. Connections to Ground Rods at Test Wells: Compression connectors.

4. Connections to Structural Steel: Welded connectors.

3.02 GROUNDING OVERHEAD LINES

A. Comply with IEEE C2 grounding requirements.

B. Install two parallel ground rods if resistance to ground by a single, ground-rod electrode exceeds 25 ohms.

C. Drive ground rods until tops are 12 inches below finished grade in undisturbed earth.

D. Ground-Rod Connections: Install exothermic weld for underground connections and connections to rods.

E. Lightning Arrester Grounding Conductors: Separate from other grounding conductors.

F. Protect grounding conductors running on surface of wood poles with molding extended from grade level up to and through communication service and transformer spaces.

3.03 GROUNDING UNDERGROUND DISTRIBUTION SYSTEM COMPONENTS

A. Comply with IEEE C2 grounding requirements.

B. Grounding Manholes and Handholes: Install a driven ground rod through manhole or handhole floor, close to wall, and set rod depth so 4 inches will extend above finished floor. If necessary, install ground rod before manhole is placed and provide No. 1/0 AWG bare, tinned-copper conductor from ground rod into manhole through a waterproof sleeve in manhole wall. Protect ground rods passing through concrete floor with a double wrapping of pressure-sensitive insulating tape or heat-shrunk insulating sleeve from 2 inches above to 6 inches below concrete. Seal floor opening with waterproof, non-shrink grout.

C. Grounding Connections to Manhole Components: Bond exposed-metal parts such as inserts, cable racks, pulling irons, ladders, and cable shields within each manhole or handhole, to ground rod or grounding conductor. Make connections with No. 4 AWG minimum, stranded, hard-drawn copper bonding conductor. Train conductors level or plumb around corners and fasten to manhole walls. Connect to cable armor and cable shields as recommended by manufacturer of splicing and termination kits.

D. Pad-Mounted Transformers and Switches: Install two ground rods and ground ring around the pad. Ground pad-mounted equipment and noncurrent-carrying metal items associated with substations by connecting them to underground cable and grounding electrodes. Install tinned-copper conductor not less than No. 2 AWG for ground ring and for taps to equipment grounding terminals. Bury ground ring not less than 6 inches from the foundation.

3.04 EQUIPMENT GROUNDING

A. Install insulated equipment grounding conductors with the following items, in addition to those required by NFPA 70:

1. Feeders and branch circuits.
2. Lighting circuits.
3. Receptacle circuits.
4. Single-phase motor and appliance branch circuits.
5. Three-phase motor and appliance branch circuits.
6. Flexible raceway runs.
7. Armored and metal-clad cable runs.
8. Busway Supply Circuits: Install insulated equipment grounding conductor from grounding bus in the switchgear, switchboard, or distribution panel to equipment grounding bar terminal on busway.

9. Computer and Rack-Mounted Electronic Equipment Circuits: Install insulated equipment grounding conductor in branch-circuit runs from equipment-area power panels and power-distribution units.

B. Air-Duct Equipment Circuits: Install insulated equipment grounding conductor to duct-mounted electrical devices operating at 120 V and more, including air cleaners, heaters, dampers, humidifiers, and other duct electrical equipment. Bond conductor to each unit and to air duct and connected metallic piping.

C. Isolated Grounding Receptacle Circuits: Install an insulated equipment grounding conductor connected to the receptacle grounding terminal. Isolate conductor from raceway and from panelboard grounding terminals. Terminate at equipment grounding conductor terminal of the applicable derived system or service, unless otherwise indicated.

D. Isolated Equipment Enclosure Circuits: For designated equipment supplied by a branch circuit or feeder, isolate equipment enclosure from supply circuit raceway with a nonmetallic raceway fitting listed for the purpose. Install fitting where raceway enters enclosure, and install a separate insulated equipment grounding conductor. Isolate conductor from raceway and from panelboard grounding terminals. Terminate at equipment grounding conductor terminal of the applicable derived system or service, unless otherwise indicated.

E. Signal and Communication Equipment: For telephone, alarm, voice and data, and other communication equipment, provide No. 4 AWG minimum insulated grounding conductor in raceway from grounding electrode system to each service location, terminal cabinet, wiring closet, and central equipment location.

1. Service and Central Equipment Locations and Wiring Closets: Terminate grounding conductor on a 1/4-by 2-by-12-inch grounding bus.

2. Terminal Cabinets: Terminate grounding conductor on cabinet grounding terminal.

F. Metal Poles Supporting Outdoor Lighting Fixtures: Install insulated equipment grounding conductor with branch-circuit conductors.

3.05 INSTALLATION

A. Bonding Conductors: Route along shortest and straightest paths possible, unless otherwise indicated or required by code. Avoid obstructing access or placing conductors where they may be subjected to strain, impact, or damage.

B. Equipment grounding conductors: Route with corresponding phase and neutral conductors in the same raceway.

1. Use of metallic conduit or encircling metal clamps or rings to carry or secure bonding or grounding electrode conductors not permitted.

C. Common Ground Bonding with Lightning Protection System: Comply with NFPA 780 and UL 96 when interconnecting with lightning protection system. Bond electrical power system ground directly to lightning protection system grounding conductor at closest point to electrical service grounding electrode. Use bonding conductor sized same as system grounding electrode conductor, and install in conduit. Lightning protection systems are specified in Section 26 41 13 – Lightning Protection for Structures.

D. Ground Rods: Drive rods until tops are 2 inches below finished floor or final grade, unless otherwise indicated.

1. Interconnect ground rods with grounding electrode conductor below grade and as otherwise indicated. Make connections without exposing steel or damaging coating, if any.

2. For grounding electrode system, install at least three rods spaced at least one rod length from each other and located at least the same distance from other grounding electrodes.

E. Test Wells: Ground rod driven through drilled hole in bottom of handhole. Handholes are specified in Section 26 05 33 – Raceway and Boxes for Electrical Systems, and shall be at least 12 inches deep, with cover.

1. Test Wells: Install at least one test well for each service, unless otherwise indicated. Install at the ground rod electrically closest to service entrance. Set top of test well flush with finished grade or floor.

F. Bonding Straps and Jumpers: Install in locations accessible for inspection and maintenance, except where routed through short lengths of conduit.

1. Bonding to Structure: Bond straps directly to basic structure, taking care not to penetrate any adjacent parts.

2. Bonding to Equipment Mounted on Vibration Isolation Hangers and Supports: Install so vibration is not transmitted to rigidly mounted equipment.

3. Use exothermic-welded connectors for outdoor locations, but if a disconnect-type connection is required, use a bolted clamp.

G. Grounding and Bonding for Piping:

1. Metal Water Service Pipe: Install insulated copper grounding conductors, in conduit, from building's main service equipment, or grounding bus, to main metal water service entrances to building. Connect grounding conductors to main metal water service pipes, using a bolted clamp connector or by bolting a lug-type connector to a pipe flange, using one of the lug bolts of the flange. Where a dielectric main water fitting is installed, connect grounding conductor on street side of fitting unless specifically prohibited by local codes. Bond metal grounding conductor conduit or sleeve to conductor at each end.

2. Water Meter Piping: Use braided-type bonding jumpers to electrically bypass water meters. Connect to pipe with a bolted connector.

3. Bond each aboveground portion of gas piping system downstream from equipment shutoff valve.

H. Bonding Interior Metal Ducts: Bond metal air ducts to equipment grounding conductors of associated fans, blowers, electric heaters, and air cleaners. Install bonding jumper to bond across flexible duct connections to achieve continuity.

I. Grounding for Steel Building Structure: Install a driven ground rod at base of each corner column and at intermediate exterior columns at distances not more than 60 feet apart.

J. Ground Ring: Install a grounding conductor, electrically connected to each building structure ground rod and to each steel column, extending around the perimeter of building.

1. Install tinned-copper conductor not less than No. 2/0 AWG for ground ring and for taps to building steel.

2. Bury ground ring not less than 24 inches from building foundation.

K. Ufer Ground (Concrete-Encased Grounding Electrode): Fabricate according to NFPA 70; use a minimum of 20 feet of bare copper conductor not smaller than No. 4 AWG.

1. If concrete foundation is less than 20 feet long, coil excess conductor within base of foundation.

2. Bond grounding conductor to reinforcing steel in at least four locations and to anchor bolts. Extend grounding conductor below grade and connect to building's grounding grid or to grounding electrode external to concrete.

L. Locate grounding bus bar to minimize the length of bonding conductors. Fasten to wall allowing at least 2-inch clearance behind the grounding bus bar. Connect grounding bus bar with a grounding electrode conductor to the building grounding electrode system.

3.06 FIELD QUALITY CONTROL

A. Testing Agency: Comply with Section 26 08 10 – Testing of Electrical Systems.

B. Perform the following tests and inspections and prepare test reports:

1. Perform each visual and mechanical inspection and electrical test stated in NETA ATS. Certify compliance with test parameters.

2. After installing grounding system but before permanent electrical circuits have been energized, test for compliance with requirements.

3. Test completed grounding system at each location where a maximum ground-resistance level is specified, at service disconnect enclosure grounding terminal, at ground test wells. Make tests at ground rods before any conductors are connected.

   a. Measure ground resistance not less than 2 full days after last trace of precipitation and without soil being moistened by any means other than natural drainage or seepage and without chemical treatment or other artificial means of reducing natural ground resistance.

   b. Perform tests by fall-of-potential method according to IEEE 81.

4. Prepare dimensioned drawings locating each test well, ground rod and ground rod assembly, and other grounding electrodes. Identify each by letter in alphabetical order, and key to the record of tests and observations. Include the number of rods driven and their depth at each location, and include observations of weather and other phenomena that may affect test results. Describe measures taken to improve test results.

C. Report measured ground resistances that exceed the following values:

1. Power and Lighting Equipment or System with Capacity 500 kVA and Less: 10 ohms.

2. Power and Lighting Equipment or System with Capacity More Than 500 kVA: 5 ohms.

3. Power Distribution Units, Panelboards Serving Electronic Equipment, Communication Room Grounding Bus Bars: 3 ohms.

4. Substations and Pad-Mounted Equipment: 5 ohms.

5. Passenger Station Power and Lighting Equipment or System: 2 ohms.

6. Manhole Grounds: 10 ohms.

D. Excessive Ground Resistance: If resistance to ground exceeds specified values, notify the City promptly and provide recommendations to reduce ground resistance to comply with these Specifications.

END OF SECTION

This page intentionally left blank.

SECTION 26 05 33

RACEWAY AND BOXES FOR ELECTRICAL SYSTEMS

PART 1 – GENERAL

1.01 SUMMARY

A. Description: The work specified in this Section consists of requirements for the manufacture and installation of raceways, fittings, boxes, and enclosures and cabinets used in the electrical work for buildings and exterior branch and feeder circuits. Refer to Section 33 70 00 – Electrical Utilities, and Section 33 80 00 – Communication Utilities, for utility raceway requirements. Refer to Section 26 05 23 – Underground Ducts and Raceways for Electrical Systems, for traction power and signals raceway requirements.

B. Section Includes:

1. Metal Conduit and Tubing
2. Nonmetallic Conduit and Tubing
3. Optical Fiber/Communications Cable Raceway and Fittings
4. Metal Wireways
5. Boxes, Enclosures, and Cabinets
6. Handholes and Boxes for Exterior Underground Wiring
7. Source Quality Control for Underground Enclosures

C. Related Sections:

1. Section 26 05 00 – Common Work Results for Electrical
2. Section 26 05 23 – Underground Ducts and Raceways for Electrical Systems
3. Section 26 05 48 – Vibration and Seismic Controls for Electrical Systems
4. Section 26 05 53 – Identification for Electrical Systems
5. Section 33 70 00 – Electrical Utilities
6. Section 33 80 00 – Communication Utilities

1.02 REFERENCES

A. American National Standards Institute (ANSI):

1. ANSI C80.1 — American National Standard for Electrical Rigid Steel Conduit (ERSC)
2. ANSI C80.3 — American National Standard for Steel Electrical Metallic Tubing (EMT)

3. ANSI C80.6 — American National Standard for Electrical Intermediate Metal Conduit (EIMC)

B. American National Standards Institute/Society of Cable Telecommunication Engineers (ANSI/SCTE):

1. ANSI/SCTE 77 — Specification for Underground Enclosure Integrity

C. Intertek ETL SEMKO (ETL):

1. PVC-001 — ETL SEMKO High Temperature H2O PVC Coating Adhesion Test Procedure

D. International Organization for Standardization (ISO):

1. ISO 9000 — Quality Management Systems – Fundamentals and Vocabulary
2. ISO 10012 — Measurement Management Systems – Requirements for Measurement Processes and Measuring Equipment

E. National Electrical Manufacturers Association (NEMA):

1. NEMA 250 — Enclosures for Electrical Equipment (1000 Volts Maximum)
2. NEMA FB 1 — Fittings, Cast Metal Boxes, and Conduit Bodies for Conduit, Electrical Metallic Tubing, and Cable
3. NEMA OS 1 — Sheet-Steel Outlet Boxes, Device Boxes, Covers, and Box Supports
4. NEMA OS 2 — Nonmetallic Outlet Boxes, Device Boxes, Covers and Box Supports
5. NEMA RN 1 — Polyvinyl-Chloride (PVC) Externally Coated Galvanized Rigid Steel Conduit and Intermediate Metal Conduit
6. NEMA TC 2 — Electrical Polyvinyl Chloride (PVC) Conduit
7. NEMA TC 3 — Polyvinyl Chloride (PVC) Fittings for Use with Rigid PVC Conduit and Tubing
8. NEMA TC 14 — Filament Wound Reinforced thermosetting Resin Conduit and Fittings

F. National Fire Protection Association (NFPA):

1. NFPA 70 — National Electrical Code
2. NFPA 130 — Standard for Fixed Guideway Transit and Passenger Rail Systems

G. Underwriters Laboratories (UL):

1. UL 6 — Electrical Rigid Metal Conduit – Steel
2. UL 886 — Outlet Boxes and Fittings for Use in Hazardous (Classified) Locations
3. UL 2024 — Optical Fiber and Communication Cable Raceway

1.03 DEFINITIONS

A. EMT: Electrical metallic tubing

B. ENT: Electrical nonmetallic tubing

C. EPDM: Ethylene-propylene-diene M-class rubber

D. FMC: Flexible metal conduit

E. IMC: Intermediate metal conduit

F. LFMC: Liquid-tight flexible metal conduit

G. LFNC: Liquid-tight flexible nonmetallic conduit

H. NBR: Acrylonitrile-butadiene rubber

I. PVC: Polyvinyl Chloride

J. RNC: Rigid nonmetallic conduit

K. RTRC: Reinforced thermosetting resin conduit

1.04 SUBMITTALS

A. General: Refer to Section 7.7 – Submittal Procedures, and Section 7.8 – Shop Drawings, Product Data, and Samples, for submittal requirements and procedures.

B. Product Data: For surface raceways, wireways and fittings, floor boxes, hinged-cover enclosures, and cabinets.

C. Shop Drawings: For the following raceway components. Include plans, elevations, sections, details, and attachments to other work.

1. Custom enclosures and cabinets.
2. For handholes and boxes for underground wiring, including the following:
   a. Duct entry provisions, including locations and duct sizes.
   b. Frame and cover design.
   c. Grounding details.
   d. Dimensioned locations of cable rack inserts, and pulling-in and lifting irons.
   e. Joint details.

D. Coordination Drawings: Conduit routing plans, drawn to scale, on which the following items are shown and coordinated with each other, based on input from installers of the items involved:

1. Structural members in the paths of conduit groups with common supports.
2. Heating, Ventilation, and Air-Conditioning and plumbing items and architectural features in the paths of conduit groups with common supports.

E. Manufacturer Seismic Qualification Certification: Submit certification that enclosures and cabinets and their mounting provisions, including those for internal components, will

withstand seismic forces defined in Section 26 05 48 – Vibration and Seismic Controls for Electrical Systems. Include the following:

1. Basis for Certification: Indicate whether withstand certification is based on actual test of assembled components or on calculation.
   a. The term "withstand" means "the cabinet or enclosure will remain in place without separation of any parts when subjected to the seismic forces specified."
2. Dimensioned Outline Drawings of Equipment Unit: Identify center of gravity and locate and describe mounting and anchorage provisions.
3. Detailed description of equipment anchorage devices on which the certification is based and their installation requirements.

F. Qualification Data: For Professional Engineer and testing agency.

G. Source quality control test reports.

1.05 QUALITY ASSURANCE

A. General: Refer to Section 7.10 – Quality Assurance, for quality assurance requirements and procedures.

B. Electrical Components, Devices, and Accessories: Listed and labeled as defined in NFPA 70, Article 100, by a testing agency acceptable to authorities having jurisdiction, and marked for intended use.

C. Comply with NFPA 70.

D. Comply with NFPA 130.

PART 2 – PRODUCTS

2.01 METAL CONDUIT AND TUBING

A. Rigid Steel Conduit: ANSI C80.1.

B. IMC: ANSI C80.6.

C. PVC-Coated Steel Conduit: PVC-coated rigid steel conduit, coated inside and outside.

1. Comply with UL 6.
2. Comply with ETL PVC-001.
3. Minimum Coating Thickness: 0.040 inch, outside; 0.020 inch, inside.

D. EMT: ANSI C80.3.

E. FMC: Zinc-coated steel or aluminum.

F. LFMC: Flexible steel conduit with PVC jacket.

G. Fittings for Conduit (Including all Types and Flexible and Liquid-Tight), EMT, and Cable: NEMA FB 1; listed for type and size raceway with which used, and for application and environment in which installed.

1. Conduit Fittings for Hazardous (Classified) Locations: Comply with UL 886.
2. Fittings for EMT: Steel, set-screw type.
3. Coating for Fittings for PVC-Coated Conduit: Minimum thickness, 0.040 inch, with overlapping sleeves protecting threaded joints.

H. Joint Compound for Rigid Steel Conduit or IMC: Listed for use in cable connector assemblies, and compounded for use to lubricate and protect threaded raceway joints from corrosion and enhance their conductivity.

2.02 NONMETALLIC CONDUIT AND TUBING

A. RNC: NEMA TC 2, Type EPC-40-PVC, unless otherwise indicated.

B. Fittings for RNC: NEMA TC 3; match to conduit or tubing type and material.

C. RTRC:

1. NEMA Standard TC 14, Type AG
2. Sunlight resistant.
3. Comply with NFPA 130 material requirements for types used in Passenger Station and Trainway applications.

2.03 OPTICAL FIBER/COMMUNICATIONS CABLE RACEWAY AND FITTINGS

A. Description: Comply with UL 2024; flexible type, approved for plenum installation.

2.04 METAL WIREWAYS

A. Description: Sheet metal sized and shaped as indicated, NEMA 250, Type suitable for environment installed.

B. Fittings and Accessories: Include couplings, offsets, elbows, expansion joints, adapters, hold-down straps, end caps, and other fittings to match and mate with wireways as required for complete system.

C. Wireway Covers: Screw-cover type, or as indicated.

D. Finish: Manufacturer's standard enamel finish.

2.05 NONMETALLIC WIREWAYS

A. Description: Fiberglass polyester, extruded and fabricated to size and shape indicated, with no holes or knockouts. Cover is gasketed with oil-resistant gasket material and fastened with captive screws treated for corrosion resistance. Connections are flanged, with stainless-steel screws and oil-resistant gaskets.

2.06 BOXES, ENCLOSURES, AND CABINETS

A. Sheet Metal Outlet and Device Boxes: NEMA OS 1.

B. Cast-Metal Outlet and Device Boxes: NEMA FB 1, ferrous alloy, Type FD, with gasketed cover.

C. Nonmetallic Outlet and Device Boxes: NEMA OS 2.

D. Metal Floor Boxes: Cast or sheet metal, semi-adjustable, rectangular.

E. Nonmetallic Floor Boxes: Nonadjustable, round.

F. Small Sheet Metal Pull and Junction Boxes: NEMA OS 1.

G. Cast-Metal Access, Pull, and Junction Boxes: NEMA FB 1, galvanized, cast iron with gasketed cover.

H. Hinged-Cover Enclosures: NEMA 250, Type 1, with continuous-hinge cover with flush latch, unless otherwise indicated.

1. Metal Enclosures: Steel, finished inside and out with manufacturer's standard enamel.

I. Cabinets:

1. NEMA 250, Type 1, galvanized-steel box with removable interior panel and removable front, finished inside and out with manufacturer's standard enamel.

2. Hinged door in front cover with flush latch and concealed hinge.

3. Key latch to match panelboards.

4. Metal barriers to separate wiring of different systems and voltage.

5. Accessory feet where required for freestanding equipment.

2.07 HANDHOLES AND BOXES FOR EXTERIOR UNDERGROUND WIRING

A. Description: Comply with SCTE 77.

1. Color of Frame and Cover: Match surrounding area.

2. Configuration: Units shall be designed for flush burial and have closed bottom, unless otherwise indicated.

3. Cover: Weatherproof, secured by tamper-resistant locking devices and having structural load rating consistent with enclosure.

4. Cover Finish: Nonskid finish shall have a minimum coefficient of friction of 0.50.

5. Cover Legend: Molded lettering, as indicated for each service.

6. Conduit Entrance Provisions: Conduit-terminating fittings shall mate with entering ducts for secure, fixed installation in enclosure wall.

7. Handholes 12 inches wide by 24 inches long and larger shall have inserts for cable racks and pulling-in irons installed before concrete is poured.

B. Polymer-Concrete Handholes and Boxes with Polymer-Concrete Cover: Molded of sand and aggregate, bound together with polymer resin, and reinforced with steel or fiberglass or a combination of the two.

C. Fiberglass Handholes and Boxes with Polymer-Concrete Frame and Cover: Sheet-molded, fiberglass-reinforced, polyester-resin enclosure joined to polymer-concrete top ring or frame.

D. Fiberglass Handholes and Boxes: Molded of fiberglass-reinforced polyester resin, with covers of polymer concrete.

2.08 SOURCE QUALITY CONTROL FOR UNDERGROUND ENCLOSURES

A. Handhole and Pull-Box Prototype Test: Test prototypes of handholes and boxes for compliance with SCTE 77. Strength tests shall be for specified tier ratings of products supplied.

1. Tests of materials shall be performed by an independent testing agency.

2. Strength tests of complete boxes and covers shall be by either an independent testing agency or manufacturer. A qualified registered Professional Engineer shall certify tests by manufacturer.

3. Testing machine pressure gages shall have current calibration certification complying with International Organization for Standardization (ISO) 9000 and ISO 10012, and traceable to National Institute of Standards and Technology standards.

2.09 SLEEVE AND SEALS FOR RACEWAYS

A. Comply with Section 26 05 00 – Common Work Results for Electrical.

PART 3 – EXECUTION

3.01 RACEWAY APPLICATION

A. Outdoors: Apply raceway products as specified below:

1. Trainway: RTRC that meets material requirements of NFPA 130.

2. Passenger Stations: RTRC that meets material requirements of NFPA 130.

3. Exposed Conduit in other than Trainway or Passenger Station applications:
   a. Not Subject to Physical Damage: RTRC.
   b. Subject to Physical Damage: PVC-coated steel conduit.
   c. For Service Reconnections: Rigid Steel Conduit.

4. Underground Conduit:
   a. Feeders: RNC, Type EPC-40-PVC, concrete encased.
   b. Essential power circuits: RNC, Type EPC-40-PVC, concrete encased.
   c. Non-essential branch circuits: RNC, Type EPC-80-PVC, direct buried.

5. Connection to Vibrating Equipment (Including Transformers and Hydraulic, Pneumatic, Electric Solenoid, or Motor-Driven Equipment): LFMC.

6. Boxes and Enclosures, Aboveground: NEMA 250, Type 4X, 316 stainless steel or fiberglass.

7. Application of Handholes and Boxes for Underground Wiring:

a. Handholes and Pull Boxes in Driveway, Parking Lot, and Off-Roadway Locations, Subject to Occasional, Nondeliberate Loading by Heavy Vehicles: Fiberglass-reinforced polyester resin, SCTE 77, Tier 15 structural load rating.
b. Handholes and Pull Boxes in Sidewalk and Similar Applications with a Safety Factor for Nondeliberate Loading by Vehicles: Polymer-concrete units, SCTE 77, Tier 8 structural load rating.
c. Handholes and Pull Boxes Subject to Light-Duty Pedestrian Traffic Only: Fiberglass-reinforced polyester resin, structurally tested according to SCTE 77 with 3,000-lbf vertical loading.

B. Comply with the following indoor applications, unless otherwise indicated:

1. Exposed in Unconditioned Spaces:
   a. Not Subject to Physical Damage: RTRC.
   b. Subject to Physical Damage: PVC-coated steel conduit.
   c. For Service Reconnections Not Subject to Physical Damage: EMT conduit.
   d. For Service Reconnections Subject to Physical Damage: Rigid Steel conduit.
2. Exposed Conditioned Spaces:
   a. Not Subject to Physical Damage: EMT.
   b. Subject to Physical Damage: Rigid steel conduit.
3. Concealed in Ceilings and Interior Walls and Partitions: EMT.
4. Connection to Vibrating Equipment (Including Transformers and Hydraulic, Pneumatic, Electric Solenoid, or Motor-Driven Equipment): FMC, except use LFMC in damp or wet locations.
5. Damp or Wet Locations: RTRC.
6. Raceways for Optical Fiber or Communications Cable in Spaces Used for Environmental Air: Plenum-type, optical fiber/communications cable raceway.
7. Raceways for Optical Fiber or Communications Cable Risers in Vertical Shafts: EMT.
8. Raceways for Concealed General Purpose Distribution of Optical Fiber or Communications Cable: General-use, optical fiber/communications cable raceway.
9. Boxes and Enclosures:
   a. Conditioned spaces: NEMA 250, Type 1.
   b. Unconditioned spaces: NEMA 250, Type 4X, 316 stainless steel or fiberglass.
   c. Damp or wet locations: NEMA 250, Type 4X, 316 stainless steel or fiberglass.
   d. For Service Reconnections in unconditioned spaces: NEMA 250, Type 1.
   e. For Service Reconnections in damp or wet locations: NEMA 250, TYPE 3R.

C. Minimum Raceway Size: 3/4-inch trade size.

D. Raceway Fittings: Compatible with raceways and suitable for use and location.

1. Rigid and Intermediate Steel Conduit: Use threaded rigid steel conduit fittings, unless otherwise indicated.

2. PVC Externally Coated, Rigid Steel Conduits: Use only fittings listed for use with that material. Patch and seal all joints, nicks, and scrapes in PVC coating after installing conduits and fittings. Use sealant recommended by fitting manufacturer.

3.02 INSTALLATION

A. Comply with NECA 1 for installation requirements applicable to products specified in Part 2 except where requirements on the Design Plans or in this Article are stricter.

B. Keep raceways at least 6 inches away from parallel runs of flues and steam or hot-water pipes. Install horizontal raceway runs above water and steam piping.

C. Complete raceway installation before starting conductor installation.

D. Support raceways as specified in Section 26 05 29 – Hangers and Supports for Electrical Systems.

E. Arrange stub-ups so curved portions of bends are not visible above the finished slab.

F. Install no more than the equivalent of three 90-degree bends between pull points in any conduit run except for communications conduits, for which a maximum of three or fewer bends are allowed.

G. Conceal conduit and EMT within finished walls, ceilings, and floors, unless otherwise indicated.

H. For Service Reconnections provided in existing buildings conceal conduits in accessible ceilings and route exposed conduits to maintain function of spaces and minimize visual impact.

I. Raceways Embedded in Slabs:

1. Run conduit larger than 1-inch trade size, parallel or at right angles to main reinforcement. Where at right angles to reinforcement, place conduit close to slab support.

2. Arrange raceways to cross building expansion joints at right angles with expansion fittings.

3. Change from ENT to RNC, Type EPC-40-PVC, rigid steel conduit, or IMC before rising above the floor.

J. Threaded Conduit Joints, Exposed to Wet, Damp, Corrosive, or Outdoor Conditions: Apply listed compound to threads of raceway and fittings before making up joints. Follow compound manufacturer's written instructions.

K. Raceway Terminations at Locations Subject to Moisture or Vibration: Use insulating bushings to protect conductors, including conductors smaller than No. 4 AWG.

L. Install pull wires in empty raceways. Use polypropylene or monofilament plastic line with not less than 200-pound tensile strength. Leave at least 12 inches of slack at each end of pull wire.

M. Raceways for Optical Fiber and Communications Cable: Install raceways, metallic and nonmetallic, rigid and flexible, as follows:

1. 3/4-Inch Trade Size and Smaller: Install raceways in maximum lengths of 50 feet.

2. 1-Inch Trade Size and Larger: Install raceways in maximum lengths of 75 feet.

3. Install with a maximum of two 90-degree bends or equivalent for each length of raceway unless Design Plans show stricter requirements. Separate lengths with pull or junction boxes or terminations at distribution frames or cabinets where necessary to comply with these requirements.

N. Install raceway sealing fittings at suitable, approved, and accessible locations and fill them with listed sealing compound. For concealed raceways, install each fitting in a flush steel box with a blank cover plate having a finish similar to that of adjacent plates or surfaces. Install raceway sealing fittings at the following points:

1. Where conduits pass from warm to cold locations, such as boundaries of refrigerated spaces.

2. Where otherwise required by NFPA 70.

O. Expansion-Joint Fittings for RNC and RTRC: Install in each run of aboveground conduit that is located where environmental temperature change may exceed 30 degrees Fahrenheit, and that has straight-run length that exceeds 25 feet.

1. Install expansion-joint fittings for each of the following locations, and provide type and quantity of fittings that accommodate temperature change listed for location:

a. Outdoor Locations Not Exposed to Direct Sunlight: 125 degrees Fahrenheit temperature change.

b. Outdoor Locations Exposed to Direct Sunlight: 155 degrees Fahrenheit temperature change.

c. Indoor Spaces: Connected with the Outdoors without Physical Separation: 125 degrees Fahrenheit temperature change.

2. Install fitting(s) that provide expansion and contraction for at least 0.00041 inch per foot of length of straight run per degrees Fahrenheit of temperature change. Use only fittings listed for that purpose.

3. Install each expansion-joint fitting with position, mounting, and piston setting selected according to manufacturer's written instructions for conditions at specific location at the time of installation.

P. Expansion-Joint Fittings for RTRC: Install according to manufacturer's recommendations.

Q. Flexible Conduit Connections: Use maximum of 72 inches of flexible conduit for recessed and semirecessed lighting fixtures, equipment subject to vibration, noise transmission, or movement; and for transformers and motors.

1. Use LFMC in damp or wet locations.

R. Recessed Boxes in Masonry Walls: Saw-cut opening for box in center of cell of masonry block, and install box flush with surface of wall.

S. Set metal floor boxes level and flush with finished floor surface.

T. Set nonmetallic floor boxes level. Trim after installation to fit flush with finished floor surface.

3.03 INSTALLATION OF UNDERGROUND CONDUIT

A. Direct-Buried Conduit:

1. Excavate trench bottom to provide firm and uniform support for conduit. Prepare trench bottom for pipe less than 6 inches in nominal diameter.

2. Slope all raceway to manholes or handholes for drainage and away from buildings.

3. Raceway slope: 3 inches per 100 feet, minimum.

4. Mandrel raceways prior to backfilling.

5. Install backfill as specified.

6. After installing conduit, backfill and compact. Start at tie-in point, and work toward end of conduit run, leaving conduit at end of run free to move with expansion and contraction as temperature changes during this process. Firmly hand tamp backfill around conduit to provide maximum supporting strength. After placing controlled backfill to within 12 inches of finished grade, make final conduit connection at end of run and complete backfilling with normal compaction.

7. Install manufactured duct elbows for stub-ups at poles and equipment and at building entrances through the floor, unless otherwise indicated. Encase elbows for stub-up ducts throughout the length of the elbow.

8. Install manufactured rigid steel conduit elbows for stub-ups at poles and equipment and at building entrances through the floor.
   a. Couple steel conduits to ducts with adapters designed for this purpose, and encase coupling with 3 inches of concrete.
   b. For stub-ups at equipment mounted on outdoor concrete bases, extend steel conduit horizontally a minimum of 60 inches from edge of equipment pad or foundation. Install insulated grounding bushings on terminations at equipment.

9. Warning Tape: Bury warning tape approximately 12 inches above direct-buried conduits. Align tape along the centerline of conduit. Use multiple tapes where width of multiple lines installed in a common trench or concrete envelope exceeds 16 inches overall. Comply with section 26 05 53 – Identification for Electrical Systems.

10. Install pull string in all underground raceways.

3.04 INSTALLATION OF UNDERGROUND HANDHOLES AND BOXES

A. Install handholes and boxes level and plumb and with orientation and depth coordinated with connecting conduits to minimize bends and deflections required for proper entrances.

B. Unless otherwise indicated, support units on a level bed of crushed stone or gravel, graded from 1/2-inch sieve to No. 4 sieve and compacted to same density as adjacent undisturbed earth.

C. Elevation: In paved areas, set so cover surface will be flush with finished grade. Set covers of other enclosures 1 inch above finished grade.

D. Install removable hardware, including pulling eyes, cable stanchions, cable arms, and insulators, as required for installation and support of cables and conductors and as

indicated. Select arm lengths to be long enough to provide spare space for future cables, but short enough to preserve adequate working clearances in the enclosure.

E. Field-cut openings for conduits according to enclosure manufacturer's written instructions. Cut wall of enclosure with a tool designed for material to be cut. Size holes for terminating fittings to be used, and seal around penetrations after fittings are installed.

F. Terminate raceway at Handhole flush with inside wall with an end bell fitting.

3.05 SLEEVE AND SEAL INSTALLATION FOR RACEWAYS

A. Comply with Section 26 05 00 – Common Work Results for Electrical.

3.06 FIRESTOPPING

A. Comply with Section 26 05 00 – Common Work Results for Electrical.

3.07 PROTECTION

A. Provide final protection and maintain conditions that ensure coatings, finishes, and cabinets are without damage or deterioration at time of Substantial Completion.

1. Repair damage to galvanized finishes with zinc-rich paint recommended by manufacturer.

2. Repair damage to PVC or paint finishes with matching touchup coating recommended by manufacturer.

END OF SECTION

SECTION 26 05 48

VIBRATION AND SEISMIC CONTROLS FOR ELECTRICAL SYSTEMS

PART 1 – GENERAL

1.01 SUMMARY

A. Description: The work specified in this Section consists of requirements for the manufacture and installation of vibration and seismic restraint devices used in the electrical work.

B. Section Includes:

1. Vibration Isolators
2. Seismic-Restraint Devices
3. Factory Finishes

1.02 REFERENCES

A. American Society of Civil Engineers (ASCE):

1. ASCE 7-05 — Minimum Design Loads for Buildings and Other Structures

B. ASTM International (ASTM):

1. ASTM A492 — Standard Specification for Stainless Steel Rope Wire
2. ASTM A603 — Standard Specification for Zinc-Coated Steel Structural Wire Rope
3. ASTM E488 — Standard Test Methods for Strength of Anchors in Concrete and Masonry Elements

C. American Welding Society (AWS):

1. AWS D1.1/D1.1M — Structural Welding Code – Steel

D. Code of Federal Regulations (CFR):

1. 29 CFR 1910.7 — Definition and Requirements for a Nationally Recognized Testing Laboratory

E. International Code Council (ICC) Evaluation Service Report (ESR):

1. ESR 1546 — Hilti HDA Carbon Steel and Stainless Steel Undercut Anchors for Cracked and Uncracked Concrete

F. Metal Framing Manufacturers Association (MFMA):

1. MFMA-3 — Metal Framing

G. National Fire Protection Association (NFPA):

1. NFPA 70 National Electrical Code

1.03 DEFINITIONS

A. IBC: International Building Code.

B. ICC-ES: ICC-Evaluation Service.

1.04 PERFORMANCE REQUIREMENTS

A. Wind-Restraint Loading:

1. Basic Wind Speed: 105 mph.

2. Building Classification Category: III.

3. Comply with City and County of Honolulu Building Code Chapter 16.

B. Seismic-Restraint Loading:

1. Site Class as Defined in the IBC: F unless otherwise indicated in Codes or other project documents.

2. Assigned Seismic Use Group or Building Category as Defined in the IBC: II.
   a. Component Importance Factor: 1.5.
   b. Component Response Modification Factor: See ASCE 7-05 Table 13.6-1.
   c. Component Amplification Factor: See ASCE 7-05 Table 13.6-1.

3. Design Spectral Response Acceleration at Short Periods (0.2 Second): 61 percent.

1.05 SUBMITTALS

A. General: Refer to Section 7.7 – Submittal Procedures, and Section 7.8 – Shop Drawings, Product Data, and Samples, for submittal requirements and procedures.

B. Product Data: For the following:

1. Include rated load, rated deflection, and overload capacity for each vibration isolation device.

2. Illustrate and indicate style, material, strength, fastening provision, and finish for each type and size of seismic-restraint component used.
   a. Tabulate types and sizes of seismic restraints, complete with report numbers and rated strength in tension and shear as evaluated by an evaluation service member of ICC-ES or an agency acceptable to authorities having jurisdiction.
   b. Annotate to indicate application of each product submitted and compliance with requirements.

3. Restrained-Isolation Devices: Include ratings for horizontal, vertical, and combined loads.

C. Design Submittal: For vibration isolation and seismic-restraint details indicated to comply with performance requirements and design criteria, including analysis data signed and sealed by the qualified Professional Engineer responsible for their preparation.

1. Design Calculations: Calculate static and dynamic loading due to equipment weight and operation, seismic forces required to select vibration isolators and seismic restraints.
   a. Coordinate design calculations with wind-load calculations required for equipment mounted outdoors. Comply with requirements in other Division 26 Sections for equipment mounted outdoors.
2. Indicate materials and dimensions and identify hardware, including attachment and anchorage devices.
3. Field-fabricated supports.
4. Seismic-Restraint Details:
   a. Design Analysis: To support selection and arrangement of seismic restraints. Include calculations of combined tensile and shear loads.
   b. Details: Indicate fabrication and arrangement. Detail attachments of restraints to the restrained items and to the structure. Show attachment locations, methods, and spacings. Identify components, list their strengths, and indicate directions and values of forces transmitted to the structure during seismic events. Indicate association with vibration isolation devices.
   c. Preapproval and Evaluation Documentation: By an evaluation service member of ICC-ES or an agency acceptable to authorities having jurisdiction, showing maximum ratings of restraint items and the basis for approval (tests or calculations).

D. Coordination Drawings: Show coordination of seismic bracing for electrical components with other systems and equipment in the vicinity, including other supports and seismic restraints.

E. Welding certificates.

F. Qualification Data: For Professional Engineer and testing agency.

G. Field quality control test reports.

1.06 QUALITY ASSURANCE

A. General: Refer to Section 7.10 – Quality Assurance, for quality assurance requirements and procedures.

B. Testing Agency Qualifications: An independent agency, with the experience and capability to conduct the testing indicated, that is a nationally recognized testing laboratory (NRTL) as defined by Occupational Safety and Health Administration (OSHA) in 29 CFR 1910.7, and that is acceptable to authorities having jurisdiction.

C. Comply with seismic-restraint requirements in the IBC unless requirements in this Section are more stringent.

D. Welding: Qualify procedures and personnel according to AWS D1.1/D1.1M, “Structural Welding Code – Steel.”

E. Seismic-restraint devices shall have horizontal and vertical load testing and analysis and shall bear anchorage preapproval OSHPD Pre-Approval number from OSHPD, preapproval by ICC-ES, or preapproval by another agency acceptable to authorities having jurisdiction, showing maximum seismic-restraint ratings. Ratings based on independent testing are preferred to ratings based on calculations. If preapproved ratings are not available, submittals based on independent testing are preferred. Calculations (including combining shear and tensile loads) to support seismic-restraint designs must be signed and sealed by a qualified Professional Engineer.

F. Comply with NFPA 70.

PART 2 – PRODUCTS

2.01 VIBRATION ISOLATORS

A. Pads: Arrange in single or multiple layers of sufficient stiffness for uniform loading over pad area, molded with a nonslip pattern and galvanized-steel baseplates, and factory cut to sizes that match requirements of supported equipment.

1. Resilient Material: Oil- and water-resistant neoprene or rubber.

B. Spring Isolators: Freestanding, laterally stable, open-spring isolators.

1. Outside Spring Diameter: Not less than 80 percent of the compressed height of the spring at rated load.

2. Minimum Additional Travel: 50 percent of the required deflection at rated load.

3. Lateral Stiffness: More than 80 percent of rated vertical stiffness.

4. Overload Capacity: Support 200 percent of rated load, fully compressed, without deformation or failure.

5. Baseplates: Factory drilled for bolting to structure and bonded to 1/4-inch- thick, rubber isolator pad attached to baseplate underside. Baseplates shall limit floor load to 500 psig.

6. Top Plate and Adjustment Bolt: Threaded top plate with adjustment bolt and cap screw to fasten and level equipment.

C. Restrained Spring Isolators: Freestanding, steel, open-spring isolators with seismic or limit-stop restraint.

1. Housing: Steel with resilient vertical-limit stops to prevent spring extension due to weight being removed; factory-drilled baseplate bonded to 1/4-inch- thick, neoprene or rubber isolator pad attached to baseplate underside; and adjustable equipment mounting and leveling bolt that acts as blocking during installation.

2. Restraint: Seismic or limit-stop as required for equipment.

3. Outside Spring Diameter: Not less than 80 percent of the compressed height of the spring at rated load.

4. Minimum Additional Travel: 50 percent of the required deflection at rated load.

5. Lateral Stiffness: More than 80 percent of rated vertical stiffness.

6. Overload Capacity: Support 200 percent of rated load, fully compressed, without deformation or failure.

2.02 SEISMIC-RESTRAINT DEVICES

A. General Requirements for Restraint Components: Structural Safety Factor: Allowable strength in tension, shear, and pullout force of components shall be at least four times the maximum seismic forces to which they will be subjected.

B. Channel Support System: MFMA-3, shop- or field-fabricated support assembly made of slotted steel channels with accessories for attachment to braced component at one end and to building structure at the other end and other matching components and with corrosion-resistant coating; and rated in tension, compression, and torsion forces.

C. Restraint Cables: ASTM A603 galvanized or ASTM A492 stainless-steel cables with end connections made of steel assemblies with thimbles, brackets, swivels, and bolts designed for restraining cable service; and with a minimum of two clamping bolts for cable engagement.

D. Hanger Rod Stiffener: Steel tube or steel slotted-support-system sleeve with internally bolted connections or reinforcing steel angle clamped to hanger rod. Do not weld stiffeners to rods.

E. Bushings for Floor-Mounted Equipment Anchor: Neoprene bushings designed for rigid equipment mountings and matched to type and size of anchors and studs.

F. Bushing Assemblies for Wall-Mounted Equipment Anchorage: Assemblies of neoprene elements and steel sleeves designed for rigid equipment mountings, and matched to type and size of attachment devices.

G. Resilient Isolation Washers and Bushings: One-piece, molded, oil- and water-resistant neoprene, with a flat washer face.

H. Mechanical Anchor: Drilled-in and stud-wedge or female-wedge type in zinc-coated steel for interior applications and 316 stainless steel for exterior applications. Select anchors with strength required for anchor and as tested according to ASTM E488. Minimum length of eight times diameter.

I. Adhesive Anchor: Drilled-in and capsule anchor system containing polyvinyl or urethane methacrylate-based resin and accelerator, or injected polymer or hybrid mortar adhesive. Provide anchor bolts and hardware with zinc-coated steel for interior applications and 316 stainless steel for exterior applications. Select anchor bolts with strength required for anchor and as tested according to ASTM E488.

J. Undercut Anchor: Approved by ESR 1546

2.03 FACTORY FINISHES

A. Finish: Manufacturer's standard paint applied to factory-assembled and -tested equipment before shipping.

1. Powder coating on springs and housings.

2. All hardware shall be galvanized. Hot-dip galvanize metal components for use in exterior and unconditioned interior locations.

3. Baked enamel or powder coat for metal components on isolators for interior use.

4. Color-code or otherwise mark vibration isolation and seismic-control devices to indicate capacity range.

PART 3 – EXECUTION

3.01 EXAMINATION

A. Examine areas and equipment to receive vibration isolation and seismic-control devices for compliance with requirements for installation tolerances and other conditions affecting performance.

B. Examine roughing-in of reinforcement and cast-in-place anchors to verify actual locations before installation.

C. Proceed with installation only after unsatisfactory conditions have been corrected.

3.02 APPLICATIONS

A. Multiple Raceways or Cables: Secure raceways and cables to trapeze member with clamps approved for application by an evaluation service member of ICC-ES or an agency acceptable to authorities having jurisdiction.

B. Hanger Rod Stiffeners: Install hanger rod stiffeners where indicated or scheduled on Drawings to receive them and where required to prevent buckling of hanger rods due to seismic forces.

C. Strength of Support and Seismic-Restraint Assemblies: Where not indicated, select sizes of components so strength will be adequate to carry present and future static and seismic loads within specified loading limits.

D. Use stainless steel devices for exposed outdoor applications.

3.03 SEISMIC-RESTRAINT DEVICE INSTALLATION

A. Equipment and Hanger Restraints:

1. Install restrained isolators on electrical equipment.

2. Install resilient, bolt-isolation washers on equipment anchor bolts where clearance between anchor and adjacent surface exceeds 0.125 inch.

3. Install seismic-restraint devices using methods approved by an evaluation service member of ICC-ES or an agency acceptable to authorities having jurisdiction providing required submittals for component.

B. Install bushing assemblies for mounting bolts for wall-mounted equipment, arranged to provide resilient media where equipment or equipment-mounting channels are attached to wall.

C. Attachment to Structure: If specific attachment is not indicated, anchor bracing to structure at flanges of beams, at upper truss chords of bar joists, or at concrete members.

D. Drilled-in Anchors:

1. Identify position of reinforcing steel and other embedded items prior to drilling holes for anchors. Do not damage existing reinforcing or embedded items during coring or drilling. Notify the structural engineer if reinforcing steel or other embedded items are encountered during drilling. Locate and avoid prestressed tendons, electrical and telecommunications conduit, and gas lines.

2. Do not drill holes in concrete or masonry until concrete, mortar, or grout has achieved full design strength.

3. Wedge Anchors: Protect threads from damage during anchor installation. Heavy-duty sleeve anchors shall be installed with sleeve fully engaged in the structural element to which anchor is to be fastened.

4. Adhesive Anchors: Clean holes to remove loose material and drilling dust prior to installation of adhesive. Place adhesive in holes proceeding from the bottom of the hole and progressing toward the surface in such a manner as to avoid introduction of air pockets in the adhesive.

5. Set anchors to manufacturer's recommended torque, using a torque wrench.

6. Install zinc-coated steel anchors for interior and stainless-steel anchors for exterior applications.

7. Where equipment is suspended from ceilings or walls such that anchors are in tension as a full-time loading condition, select undercut anchors or cast-in anchors. Wedge, powder-actuated, or epoxy anchors are not permitted for full-time tension loads.

3.04 ACCOMMODATION OF DIFFERENTIAL SEISMIC MOTION

A. Install flexible connections in runs of raceways, cables, wireways, cable trays, and busways where they cross seismic joints, where adjacent sections or branches are supported by different structural elements, and where they terminate with connection to equipment that is anchored to a different structural element from the one supporting them as they approach equipment.

3.05 FIELD QUALITY CONTROL

A. Testing Agency: Engage a qualified testing agency to perform tests and inspections and prepare test reports.

B. Perform tests and inspections.

C. Tests and Inspections:

1. Provide evidence of recent calibration of test equipment by a testing agency acceptable to authorities having jurisdiction.

2. Schedule test with HART, before connecting anchorage device to restrained component (unless postconnection testing has been approved), and with at least seven days' advance notice.

3. Obtain HART's approval before transmitting test loads to structure. Provide temporary load-spreading members.

4. Test at least four of each type and size of installed anchors and fasteners selected by the HART.

5. Test to 90 percent of rated proof load of device.

6. Measure isolator restraint clearance.

7. Measure isolator deflection.

8. Verify snubber minimum clearances.

9. If a device fails test, modify all installations of same type and retest until satisfactory results are achieved.

D. Remove and replace malfunctioning units and retest as specified above.

E. Prepare test and inspection reports.

3.06 ADJUSTING

A. Adjust isolators after isolated equipment is at operating weight.

B. Adjust limit stops on restrained spring isolators to mount equipment at normal operating height. After equipment installation is complete, adjust limit stops so they are out of contact during normal operation.

C. Adjust active height of spring isolators.

D. Adjust restraints to permit free movement of equipment within normal mode of operation.

END OF SECTION

SECTION 26 05 53

IDENTIFICATION FOR ELECTRICAL SYSTEMS

PART 1 – GENERAL

1.01 SUMMARY

A. Description: The work specified in this Section consists of requirements for the manufacture and installation of identification tape, signs, and labels used in the electrical Work.

B. Section Includes:

1. Power Raceway Identification Materials
2. Armored and Metal-Clad Cable Identification Materials
3. Power and Control Cable Identification Materials
4. Conductor Identification Materials
5. Floor Marking Tape
6. Underground-Line Warning Tape
7. Warning Labels and Signs
8. Instruction Signs
9. Equipment Identification Labels
10. Miscellaneous Identification Products

C. Related Sections:

1. Section 09 91 00 – Painting
2. Section 26 05 33 – Raceway and Boxes for Electrical Systems

1.02 REFERENCES

A. American National Standards Institute (ANSI):

1.	ANSI A13.1	Scheme for the Identification of Piping Systems
2.	ANSI Z535.1	Safety Color Code
3.	ANSI Z535.2	Environmental and Facility Safety Signs
4.	ANSI Z535.3	American National Standard Criteria for Safety Symbols
5.	ANSI Z535.4	American National Standard for Product Safety Signs and Labels
6.	ANSI Z535.5	American National Standard for Safety Tags and Barricade Tapes (for Temporary Hazards)

B. ASTM International (ASTM):

1. ASTM D882 Standard Test Method for Tensile Properties of Thin Plastic Sheeting

C. Code of Federal Regulations (CFR):

1. 29 CFR 1910.144 Safety Color Code for Marking Physical Hazards
2. 29 CFR 1910.145 Specifications for Accident Prevention Signs and Tags
3. 29 CFR 1926.403 Safety and Health Regulations for Construction – Electrical

D. National Fire Protection Association (NFPA):

1. NFPA 70 National Electrical Code

E. Underwriters Laboratories (UL):

1. UL 969 UL Standard for Safety Marking and Labeling Systems

1.03 SUBMITTALS

A. General: Refer to Section 7.7 – Submittal Procedures, and Section 7.8 – Shop Drawings, Product Data, and Samples, for submittal requirements and procedures.

B. Product Data: For each electrical identification product indicated.

C. Samples: For each electrical identification product indicated.

1.04 QUALITY ASSURANCE

A. General: Refer to Section7.10– Quality Assurance, for quality assurance requirements and procedures.

B. Comply with ANSI A13.1.

C. Comply with NFPA 70.

D. Comply with 29 CFR 1910.144 and 29 CFR 1910.145.

E. Comply with ANSI Z535.4 for safety signs and labels.

F. Adhesive-attached labeling materials, including label stocks, laminating adhesives, and inks used by label printers, shall comply with UL 969.

PART 2 – PRODUCTS

2.01 POWER RACEWAY IDENTIFICATION MATERIALS

A. Comply with ANSI A13.1 for minimum size of letters for legend and for minimum length of color field for each raceway size.

B. Colors for Raceways Carrying Circuits at 600 V or Less:

1. Black letters on an orange field.

2. Legend: Indicate voltage and system or service type.

C. Self-Adhesive Vinyl Labels for Raceways Carrying Circuits at 600 V or Less: Preprinted, flexible label laminated with a clear, weather- and chemical-resistant coating and matching wraparound adhesive tape for securing ends of legend label.

D. Snap-Around Labels for Raceways Carrying Circuits at 600 V or Less: Slit, pretensioned, flexible, preprinted, color-coded acrylic sleeve, with diameter sized to suit diameter of raceway or cable it identifies and to stay in place by gripping action.

E. Snap-Around, Color-Coding Bands for Raceways Carrying Circuits at 600 V or Less: Slit, pretensioned, flexible, solid-colored acrylic sleeve, 2 inches long, with diameter sized to suit diameter of raceway or cable it identifies and to stay in place by gripping action.

F. Write-On Tags: Polyester tag, 0.015-inch thick, with corrosion-resistant grommet and cable tie for attachment to conductor or cable.

1. Marker for Tags: Machine-printed, permanent, waterproof, black ink marker recommended by printer manufacturer.

2.02 ARMORED AND METAL-CLAD CABLE IDENTIFICATION MATERIALS

A. Comply with ANSI A13.1 for minimum size of letters for legend and for minimum length of color field for each raceway and cable size.

B. Colors for Raceways Carrying Circuits at 600 V and Less:

1. Black letters on an orange field

2. Legend: Indicate voltage and system or service type

C. Self-Adhesive Vinyl Labels: Preprinted, flexible label laminated with a clear, weather- and chemical-resistant coating and matching wraparound adhesive tape for securing ends of legend label.

D. Self-Adhesive Vinyl Tape: Colored, heavy duty, waterproof, fade resistant; 2 inches wide; compounded for outdoor use.

2.03 POWER AND CONTROL CABLE IDENTIFICATION MATERIALS

A. Comply with ANSI A13.1 for minimum size of letters for legend and for minimum length of color field for each raceway and cable size.

B. Self-Adhesive Vinyl Labels: Preprinted, flexible label laminated with a clear, weather- and chemical-resistant coating and matching wraparound adhesive tape for securing ends of legend label.

C. Write-On Tags: Polyester tag, 0.015-inch thick, with corrosion-resistant grommet and cable tie for attachment to conductor or cable.

1. Marker for Tags: Machine-printed, permanent, waterproof, black ink marker recommended by printer manufacturer

D. Snap-Around Labels: Slit, pretensioned, flexible, preprinted, color-coded acrylic sleeve, with diameter sized to suit diameter of raceway or cable it identifies and to stay in place by gripping action.

E. Snap-Around, Color-Coding Bands: Slit, pretensioned, flexible, solid-colored acrylic sleeve, 2 inches long, with diameter sized to suit diameter of raceway or cable it identifies and to stay in place by gripping action.

2.04 CONDUCTOR IDENTIFICATION MATERIALS

A. Color-Coding Conductor Tape: Colored, self-adhesive vinyl tape not less than 3 mils thick by 1 to 2 inches wide.

B. Self-Adhesive Vinyl Labels: Preprinted, flexible label laminated with a clear, weather- and chemical-resistant coating and matching wraparound adhesive tape for securing ends of legend label.

C. Marker Tapes: Vinyl or vinyl-cloth, self-adhesive wraparound type, with circuit identification legend machine printed by thermal transfer or equivalent process.

D. Write-On Tags: Polyester tag, 0.015-inch thick, with corrosion-resistant grommet and cable tie for attachment to conductor or cable.

1. Marker for Tags: Machine-printed, permanent, waterproof, black ink marker recommended by printer manufacturer.

2.05 FLOOR MARKING TAPE

A. 2-inch wide, 5-mil pressure-sensitive vinyl tape, with black and white stripes and clear vinyl overlay.

2.06 UNDERGROUND-LINE WARNING TAPE

A. Tape:

1. Printing on tape shall be permanent and shall not be damaged by burial operations.

2. Tape material and ink shall be chemically inert, and not subject to degrading when exposed to acids, alkalis, and other destructive substances commonly found in soils.

B. Color and Printing:

1. Comply with ANSI Z535.1 through ANSI Z535.5.

2. Inscriptions for Red-Colored Tapes: “ELECTRIC LINE, HIGH VOLTAGE.”

3. Inscriptions for Orange-Colored Tapes: “TELEPHONE CABLE, CATV CABLE, COMMUNICATIONS CABLE, OPTICAL FIBER CABLE.”

C. Tag:

1. Pigmented polyolefin, bright-colored, continuous-printed on one side with the inscription of the utility, compounded for direct-burial service.

2. Thickness: 4 mils.

3. Weight: 18.5 lb/1,000 sq. ft.

4. 3-Inch Tensile According to ASTM D882: 30 lbf, and 2,500 psi.

D. Tag: Detectable Type:

1. Detectable three-layer laminate, consisting of a printed pigmented polyolefin film, a solid aluminum-foil core, and a clear protective film that allows inspection of the continuity of the conductive core, bright-colored, continuous-printed on one side with the inscription of the utility, compounded for direct-burial service.

2. Overall Thickness: 5 mils.

3. Foil Core Thickness: 0.35 mil.

4. Weight: 28 lb/1,000 sq. ft.

5. 3-Inch Tensile According to ASTM D882: 70 lbf, and 4,600 psi.

2.07 WARNING LABELS AND SIGNS

A. Comply with NFPA 70 and 29 CFR 1910.145.

B. Self-Adhesive Warning Labels: Factory-printed, multicolor, pressure-sensitive adhesive labels, configured for display on front cover, door, or other access to equipment, unless otherwise indicated.

C. Baked-Enamel Warning Signs:

1. Preprinted aluminum signs, punched or drilled for fasteners, with colors, legend, and size required for application.

2. 1/4-inch grommets in corners for mounting.

3. Nominal size, 7 inches by 10 inches.

D. Metal-Backed, Butyrate Warning Signs:

1. Weather-resistant, nonfading, preprinted, cellulose-acetate butyrate signs with 0.0396-inch galvanized-steel backing; and with colors, legend, and size required for application.

2. 1/4-inch grommets in corners for mounting.

3. Nominal size, 10 inches by 14 inches.

E. Warning label and sign shall include, but are not limited to, the following legends:

1. Multiple Power Source Warning: "DANGER – ELECTRICAL SHOCK HAZARD – EQUIPMENT HAS MULTIPLE POWER SOURCES."

2. Workspace Clearance Warning: "WARNING – OSHA REGULATION – AREA IN FRONT OF ELECTRICAL EQUIPMENT MUST BE KEPT CLEAR FOR 36 INCHES."

3. Arc Flash Hazard Warning:

WARNING – ARC FLASH HAZARD – APPROPRIATE PPE REQUIRED
FLASH BOUNDARY: XXX FEET.
FLASH HAZARD AT 18 INCHES WORKING DISTANCE: XXX cal/cm^2.

Insert calculated values for "XXX" above.

4. Insert names and wording of warning signs or labels (e.g., arc-flash, multiple services and voltages, and others).

2.08 INSTRUCTION SIGNS

A. Engraved, laminated acrylic or melamine plastic, minimum 1/16-inch thick for signs up to 20 sq. inches and 1/8-inch thick for larger sizes.

1. Engraved legend with black letters on white face insert colors.

2. Punched or drilled for mechanical fasteners.

3. Framed with mitered acrylic molding and arranged for attachment at applicable equipment.

B. Adhesive Film Label with Clear Protective Overlay: Machine printed, in black, by thermal transfer or equivalent process. Minimum letter height shall be 3/8 inch. Overlay shall provide a weatherproof and ultraviolet-resistant seal for label.

2.09 EQUIPMENT IDENTIFICATION LABELS

A. Adhesive Film Label with Clear Protective Overlay: Machine printed, in black, by thermal transfer or equivalent process. Minimum letter height shall be 3/8 inch. Overlay shall provide a weatherproof and ultraviolet-resistant seal for label.

B. Self-Adhesive, Engraved, Laminated Acrylic or Melamine Label: Adhesive backed, with white letters on a dark-gray background. Minimum letter height shall be 3/8 inch.

C. Stenciled Legend: In nonfading, waterproof, black ink or paint. Minimum letter height shall be 1/2 inch.

2.10 MISCELLANEOUS IDENTIFICATION PRODUCTS

A. Paint: Comply with requirements in Section 09 91 00 – Painting for paint materials and application requirements. Select paint system applicable for surface material and location (exterior or interior).

B. Fasteners for Labels and Signs: Self-tapping, stainless-steel screws or stainless-steel machine screws with nuts and flat and lock washers.

PART 3 – EXECUTION

3.01 INSTALLATION

A. Location: Install identification materials and devices at locations for most convenient viewing without interference with operation and maintenance of equipment.

B. Apply identification devices to surfaces that require finish after completing finish work.

C. Self-Adhesive Identification Products: Clean surfaces before application, using materials and methods recommended by manufacturer of identification device.

D. Attach signs and plastic labels that are not self-adhesive type with mechanical fasteners appropriate to the location and substrate.

E. System Identification Color-Coding Bands for Raceways and Cables: Each color-coding band shall completely encircle cable or conduit. Place adjacent bands of two-color markings in contact, side by side. Locate bands at changes in direction, at penetrations of walls and floors, at 50-foot maximum intervals in straight runs, and at 25-foot maximum intervals in congested areas.

F. Underground-Line Warning Tape: Comply with Section 26 05 33 – Raceway and Boxes for Electrical Systems.

G. Painted Identification: Comply with requirements in Section 09 91 00 – Painting for surface preparation and paint application.

3.02 IDENTIFICATION SCHEDULE

A. Accessible Raceways and Metal-Clad Cables, 600 V or less, for service, feeder, and branch circuits more than 30 A, and 120 V to ground: Install labels at 10-foot maximum intervals.

B. Accessible Raceways and Cables within Buildings: Identify the covers of each junction and pull box of the following systems with self-adhesive vinyl labels with the wiring system legend and system voltage. System legends shall be as follows:

1. Emergency Power
2. Power
3. UPS

C. Power-Circuit Conductor Identification, 600 V or Less: For conductors in vaults, pull and junction boxes, manholes, and handholes, use color-coding conductor tape to identify the phase.

1. Color-Coding for Phase and Voltage Level Identification, 600 V or Less: Use colors listed below for ungrounded service feeder and branch-circuit conductors.
   a. Color shall be factory applied or field applied for sizes larger than No. 8 AWG, if permitted by the authorities having jurisdiction.
   b. Colors for 208/120-V Circuits:
      1) Phase A: Black.
      2) Phase B: Red.
      3) Phase C: Blue.
   c. Colors for 480/277-V Circuits:
      1) Phase A: Brown
      2) Phase B: Orange.
      3) Phase C: Yellow.
   d. Field-Applied, Color-Coding Conductor Tape: Apply in half-lapped turns for a minimum distance of 6 inches from terminal points and in boxes where splices or taps are made. Apply last two turns of tape with no tension to prevent possible unwinding. Locate bands to avoid obscuring factory cable markings.

D. Install instructional sign including the color-code for grounded and ungrounded conductors using adhesive-film-type labels.

E. Conductors to Be Extended in the Future: Attach marker tape to conductors and list source.

F. Auxiliary Electrical Systems Conductor Identification: Identify field-installed alarm, control, and signal connections.

1. Identify conductors, cables, and terminals in enclosures and at junctions, terminals, and pull points. Identify by system and circuit designation.

2. Use system of marker tape designations that is uniform and consistent with system used by manufacturer for factory-installed connections.

3. Coordinate identification with Project Drawings, manufacturer's wiring diagrams, and the Operation and Maintenance Manual.

G. Locations of Underground Lines: Identify with underground-line warning tape for power, lighting, communication, and control wiring and optical fiber cable.

1. Limit use of underground-line warning tape to direct-buried cables.

2. Install underground-line warning tape for both direct-buried cables and cables in raceway.

H. Workspace Indication: Install floor marking tape to show working clearances in the direction of access to live parts. Workspace shall be as required by NFPA 70 and 29 CFR 1926.403 unless otherwise indicated. Do not install in public areas.

I. Warning Labels for Indoor Cabinets, Boxes, and Enclosures for Power and Lighting: Self-adhesive warning labels.

1. Comply with 29 CFR 1910.145.

2. Identify system voltage with black letters on an orange background.

3. Apply to exterior of door, cover, or other access.

4. For equipment with multiple power or control sources, apply to door or cover of equipment including, but not limited to, the following:
   a. Power transfer switches.
   b. Controls with external control power connections.

J. Operating Instruction Signs: Install instruction signs to facilitate proper operation and maintenance of electrical systems and items to which they connect. Install instruction signs with approved legend where instructions are needed for system or equipment operation.

K. Emergency Operating Instruction Signs: Install instruction signs with white legend on a red background with minimum 3/8-inch high letters for emergency instructions at equipment used for power transfer.

L. Equipment Identification Labels: On each unit of equipment, install unique designation label that is consistent with wiring diagrams, schedules, and the Operation and Maintenance Manual. Apply labels to disconnect switches and protection equipment, central or master units, control panels, control stations, terminal cabinets, and racks of each system. Systems include power, lighting, control, communication, signal, monitoring, and alarm systems unless equipment is provided with its own identification.

1. Label Contents:
   a. Unique designation: (e.g., "LP")
   b. Description: (e.g., "PANELBOARD")
   c. Electrical Ratings: (e.g. "400-AMP, 120/240-VOLTS")
   d. Source: (e.g., "FED FROM PANEL DP")

2. Labeling Instructions:
   a. Indoor Equipment: Adhesive film label. Unless otherwise indicated, provide a single line of text with 1/2-inch high letters on 1-1/2-inch high label; where two lines of text are required, use labels 2 inches high.
   b. Outdoor Equipment: Engraved, laminated acrylic or melamine label.
   c. Elevated Components: Increase sizes of labels and letters to those appropriate for viewing from the floor.
   d. Unless provided with self-adhesive means of attachment, fasten labels with appropriate mechanical fasteners that do not change the NEMA rating of the enclosure.

END OF SECTION

This page intentionally left blank.

SECTION 26 08 10

TESTING OF ELECTRICAL SYSTEMS

PART 1 – GENERAL

1.01 SUMMARY

A. Description:

1. This Section specifies the engagement of a single testing agency to perform the testing of electrical equipment including the furnishing of required labor, instruments, wiring, cable, and incidentals to perform the required tests and adjustments for electrical systems and equipment.

2. Perform the tests specified in this Section and the Related Sections in accordance with the General Conditions.

B. Section Includes:

1. General Testing Requirements

2. Testing Emergency Power Systems

3. Testing Station Demarcation Terminal Cabinets

C. Related Sections:

1. 26 05 19 – Low-Voltage Electrical Power Conductors and Cables

2. 26 05 26 – Grounding and Bonding for Electrical Systems

3. 26 28 16 – Enclosed Switches and Circuit Breakers

1.02 REFERENCES

A. National Fire Protection Association (NFPA)

1. NFPA 70 National Electrical Code

B. InterNational Electrical Testing Association (NETA)

1. NETA Publication Acceptance Testing Specifications (ATS)

1.03 SUBMITTALS

A. General: Refer to Section 7.7 – Submittal Procedures, and Section 7.8 – Shop Drawings, Product Data, and Samples, for submittal requirements and procedures.

B. Submit a detailed plan of the proposed methods of and scheduling of the overall systems and equipment testing program at least 45 calendar days prior to initiating the testing program.

C. Submit three complete bound sets of certified test reports upon completion of the project. Reflect in the reports test title, list personnel, and time spent in participating in test,

describe significant change with previous product testing and describe adjustments required during test.

D. Testing Agency Qualifications Certificate.

1.04 QUALITY ASSURANCE

A. General: Refer to Section 7.10 – Quality Assurance, for quality assurance requirements and procedures.

B. Comply with NFPA 70 and NETA Acceptance Testing Specifications.

C. Ensure that upon completion of tests, systems, and equipment are in satisfactory working order. Provide adjustments and replacements required to ensure this in accordance with the Contract, and as specified for each system or piece of equipment.

D. Testing Agency Qualifications:

1. Member company of NETA with the following experience:
   a. Emergency systems (generators, automatic transfer switches, central battery systems, emergency lighting): 5 years minimum.
   b. Other equipment included in the work: 3 years minimum.
2. Certified NETA technicians.

PART 2 – PRODUCTS

NOT USED

PART 3 – EXECUTION

3.01 GENERAL TESTING REQUIREMENTS

A. Engage a single testing agency to perform the tests and inspections and prepare reports described in this Section and the following Sections:

1. 26 05 19 – Low Voltage Electrical Power Conductors and Cables
2. 26 05 26 – Grounding and Bonding for Electrical Systems
3. 26 09 23 – Lighting Control Devices
4. 26 24 16 – Panelboards
5. 26 27 26 – Wiring Devices
6. 26 28 16 – Enclosed Switches and Circuit Breakers

B. Prior to putting any facility in operation, test to the satisfaction of the HRTP, the electrical equipment and interfaces with the mechanical equipment, supervisory, control, communications, and alarm systems. Changes, adjustments, and replacements required to make the equipment operate as specified shall be carried out as part of the Work.

1. At least 30 days before the time allowed in the construction schedule for commencing testing and startup procedures, identify if any additional support will be

required from other HRTP Contractors and submit request to the HRTP together with details of the proposed procedure to adapt for testing and startup of electrical equipment, except when such procedures have been covered in these Specifications. These procedures shall be submitted for review and acceptance.

2. Testing and startup procedures shall include detailed descriptions of preoperational electrical, mechanical, and instrumentation testing work. Each control device, item of mechanical, electrical, instrumentation equipment, and control circuits shall be considered in the testing procedures, which shall be designed, in a stepwise, logical sequence to ensure that equipment has been properly serviced, aligned, connected, calibrated, and adjusted prior to operation. Failure to observe these precautions may place the acceptability of the subject equipment in question, and he may either be required to demonstrate that the equipment has not been damaged, or replace it as determined by the HRTP. Testing procedures shall be designed to duplicate as nearly as possible conditions of operations, and shall be carefully selected to ensure that the equipment is not damaged. Once the testing procedures have been accepted by the HRTP, produce checkout, alignment, adjustment, and calibration signoff forms for each item of equipment. Cooperate with Contract-wide systems contractors' startup and testing to be conducted concurrently where applicable.

C. Before startup, properly service equipment and other items that normally require service in accordance with the maintenance instructions.

D. Perform execution in accordance with the applicable requirements of Occupational Safety and Health Standards (OSHA), NFPA 70, and NETA Acceptance Testing Specifications.

E. Provide qualified technical personnel thoroughly familiar with the electrical systems being tested.

F. Perform tests in the presence of witnesses selected by the HRTP, if requested.

G. Notify the HRTP if the equipment or its components fail to meet the specified inspection and test criteria. Do not repair or modify the equipment without written approval from the HRTP. After replacement, repair, or modification, repeat the specified inspections and tests to the satisfaction of the HRTP.

H. Where applicable, test individual components of a system before testing the complete system to meet the requirements of the applicable specifications.

3.02 TESTING EMERGENCY POWER SYSTEMS

A. Test operation of emergency power supplies (generator, uninterruptible power supply (UPS), or other central power source) by simulating a failure of normal power. Note that power source and transfer switches operate properly (including voltages, frequency, and time delays) and that emergency loads are supplied with correct power.

B. Test of the functions of the emergency power system, including but not limited to: re-transfer to normal power, battery charging, engine operation, and programmed exercising.

1. Testing of Emergency Lighting Units:
   a. Test units for continuity and operation.
   b. Check tightness of cable connections.

c. Aim and adjust heads or fixtures to provide distribution pattern, as approved.

d. Test lighting levels to assure they meet requirements of codes, applicable drawings, and specifications.

1) Unit must operate properly within 10 seconds maximum.

2) Unit must operate for minimum of 90 minutes.

2. Testing of Central Emergency Lighting Power Supply:

a. Operate the complete system and demonstrate that components work properly and as specified.

b. Demonstrate with meters and oscilloscope that power characteristics, including voltages, frequency, and wave form, are in accordance with these Specifications.

c. Simulate power failure to demonstrate proper transfer and re-transfer.

d. Visual Inspection:

1) Inspect equipment for signs of shipping or installation damage.

2) Verify installation per manufacturer's approved shop drawings.

3) Inspect cabinets for foreign objects and debris.

4) Verify the neutral and ground conductors are properly sized and configured.

e. Mechanical Inspection:

1) Check power modules are correctly fitted.

2) Check battery modules are correctly fitted.

3) Check terminal screws, nuts and lugs for tightness.

f. Electrical Inspection:

1) Confirm input voltages and phase rotation is correct.

2) Verify bypass voltage jumper is correct for voltages being used.

3. Standby Power Systems:

a. Test the engine generator set and the automatic transfer switch in the field to demonstrate that the system has been properly installed and that it meets the requirements of these Specifications. Supply test equipment including load bank and materials to conduct full load test.

b. Test Supervisory Control And Data Acquisition (SCADA) dry contacts operation to demarcation panel.

C. Tests shall be conducted using a load bank. Field equipment shall be disconnected until such time that emergency power system passes full load test.

D. Record and submit the results of these tests.

3.03 TESTING STATION DEMARCATION TERMINAL CABINETS

A. Test operation of SCADA alarm contacts at the terminal blocks of the Demarcation Terminal Cabinet for each of the described SCADA alarm functions indicated. Verify and record continuity of the system's cables.

1. Record and submit the results of these tests.

END OF SECTION

This page intentionally left blank.

SECTION 26 28 16

ENCLOSED SWITCHES AND CIRCUIT BREAKERS

PART 1 – GENERAL

1.01 SUMMARY

A. Description: The work specified in this Section consists of requirements for the manufacture and installation of enclosed switches and circuit breakers.

B. Section Includes:

1. Fusible Switches
2. Nonfusible Switches
3. Shunt Trip Switches
4. Molded-Case Circuit Breakers
5. Enclosures

C. Related Sections:

1. Section 26 05 48 – Vibration and Seismic Controls for Electrical Systems
2. Section 26 05 53 – Identification for Electrical Systems
3. Section 26 08 10 – Testing of Electrical Systems

1.02 REFERENCES

A. American Society of Mechanical Engineers (ASME):

1. ASME A17.1 — Safety Code for Elevators and Escalators

B. National Electrical Contractors Association (NECA):

1. NECA 1 — Standard Practices for Good Workmanship in Electrical Construction

C. National Electrical Manufacturers Association (NEMA):

1. NEMA AB 1 — Molded Case Circuit Breakers and Molded Case Switches
2. NEMA AB 3 — Molded Case Circuit Breakers and Their Application
3. NEMA KS 1 — Enclosed and Miscellaneous Distribution Equipment Switches (600 Volts Maximum)
4. NEMA 250 — Enclosures for Electrical Equipment (1000 Volts Maximum)

D. InterNational Electrical Testing Association (NETA):

1. NETA Publication — Acceptance Testing Specifications (ATS)

E. National Fire Protection Association (NFPA):

1. NFPA 70 National Electrical Code

2. NFPA 72 National Fire Alarm Code

F. Structural Engineering Institute of the American Society of Civil Engineers (SEI/ASCE):

1. SEI/ASCE 7 Minimum Design Loads for Buildings and Other Structures

G. Underwriters Laboratories (UL):

1. UL 50 UL Standard for Safety Enclosures for Electrical Equipment, Non-Environmental Considerations

2. UL 98 UL Standard for Safety Enclosed and Dead-Front Switches

3. UL 489 Standard for Safety Molded-Case Circuit Breakers, Molded-Case Switches, and Circuit-Breaker Enclosures

4. UL 1053 UL Standard for Safety Ground-Fault Sensing and Relaying Equipment

1.03 DEFINITIONS

A. A: Ampere

B. ac: Alternating Current

C. kA: Kilo-Amperes

D. N.C.: Normally closed

E. N.O.: Normally open

F. SPDT: Single pole, double throw

1.04 PERFORMANCE REQUIREMENTS

A. Seismic Performance: Enclosed switches and circuit breakers shall withstand the effects of earthquake motions determined according to SEI/ASCE 7.

1. The term "withstand" means "the unit will remain in place without separation of any parts from the device when subjected to the seismic forces specified and the unit will be fully operational after the seismic event."

1.05 SUBMITTALS

A. General: Refer to Section 7.7 – Submittal Procedures, and Section 7.8 – Shop Drawings, Product Data, and Samples, for submittal requirements and procedures.

B. Product Data: For each type of enclosed switch, circuit breaker, accessory, and component indicated.

C. Shop Drawings: For enclosed switches and circuit breakers. Include plans, elevations, sections, details, and attachments to other work.

1. Wiring Diagrams: For power, signal, and control wiring.

D. Seismic Qualification Certificates: For enclosed switches and circuit breakers, accessories, and components from manufacturer.

E. Field quality control reports.

F. Operation and maintenance data.

1.06 QUALITY ASSURANCE

A. General: Refer to Section 7.10 – Quality Assurance, for quality assurance requirements and procedures.

B. Testing Agency Qualifications: Comply with Section 26 08 10 – Testing of Electrical Systems.

C. Electrical Components, Devices, and Accessories: Listed and labeled as defined in NFPA 70, by a qualified testing agency, and marked for intended location and application.

D. Comply with NFPA 70.

PART 2 – PRODUCTS

2.01 FUSIBLE SWITCHES

A. Type HD, Heavy Duty, Single Throw, 600-V ac, 1200 A and Smaller: UL 98 and NEMA KS 1, horsepower rated, with clips or bolt pads to accommodate fuses, lockable handle with capability to accept three padlocks, and interlocked with cover in closed position. Capable of being locked in open and closed positions.

B. Accessories:

1. Equipment Ground Kit: Internally mounted and labeled for copper and aluminum ground conductors.

2. Neutral Kit: Internally mounted; insulated, capable of being grounded and bonded; labeled for copper and aluminum neutral conductors.

3. Class R Fuse Kit: Provides rejection of other fuse types when Class R fuses are specified.

4. Lugs: Compression; suitable for number, size, and conductor material.

5. Service-Rated Switches: Labeled for use as service equipment.

2.02 NONFUSIBLE SWITCHES

A. Type HD, Heavy-Duty, Single-Throw, 600-V ac, 1200 A and Smaller: UL 98 and NEMA KS 1, horsepower rated, lockable handle with capability to accept three padlocks, and interlocked with cover in closed position. Capable of being locked in open and closed positions.

B. Accessories:

1. Equipment Ground Kit: Internally mounted and labeled for copper and aluminum ground conductors.

2. Neutral Kit: Internally mounted; insulated, capable of being grounded and bonded; labeled for copper and aluminum neutral conductors.

   a. Exception: Neutral kit not required for switches used as disconnects for equipment without neutral connections.

3. Lugs: Compression; suitable for number, size, and conductor material.

2.03 SHUNT TRIP SWITCHES

A. General Requirements: Comply with ASME A17.1, UL 50, and UL 98, with 200-kA interrupting and short-circuit current rating when fitted with Class J fuses.

B. Switches: Three-pole, horsepower rated, with integral shunt trip mechanism and Class J fuse block; lockable handle with capability to accept three padlocks; interlocked with cover in closed position.

C. Control Circuit: 120-V ac; obtained from integral control power transformer, with primary and secondary fuses, with a control power transformer of enough capacity to operate shunt trip, connected pilot, and indicating and control devices.

D. Accessories:

1. Oiltight key switch for key-to-test function.

2. Oiltight “ON” pilot light.

3. Isolated neutral lug.

4. Mechanically interlocked auxiliary contacts that change state when switch is opened and closed.

5. Form C alarm contacts that change state when switch is tripped.

6. Three-pole, double-throw, fire-alarm voltage monitoring relay complying with NFPA 72.

2.04 MOLDED-CASE CIRCUIT BREAKERS

A. General Requirements: Comply with UL 489, NEMA AB 1, and NEMA AB 3, with interrupting capacity to comply with available fault currents.

B. Thermal-Magnetic Circuit Breakers: Inverse time-current element for low-level overloads and instantaneous magnetic trip element for short circuits. Adjustable magnetic trip setting for circuit-breaker frame sizes 250 A and larger.

C. Electronic Trip Circuit Breakers: Field-replaceable rating plug, rms sensing, with the following field-adjustable settings:

1. Instantaneous trip

2. Long- and short-time pickup levels

3. Long- and short-time time adjustments

4. Ground-fault pickup level, time delay, and I^2t response

D. Features and Accessories:

1. Standard frame sizes, trip ratings, and number of poles.

2. Lugs: Suitable for number, size, trip ratings, and conductor material.

3. Application Listing: Appropriate for application; Type SWD for switching fluorescent lighting loads; Type HID for feeding fluorescent and high-intensity discharge lighting circuits.

4. Ground-Fault Protection: Comply with UL 1053; integrally mounted, self-powered type with mechanical ground-fault indicator; relay with adjustable pickup and time-delay settings, push-to-test feature, internal memory, and shunt trip unit; and three-phase, zero-sequence current transformer/sensor.

5. Shunt Trip: Trip coil energized from separate circuit, with coil-clearing contact.

6. Auxiliary Contacts: One SPDT switch with "a" and "b" contacts; "a" contacts mimic circuit-breaker contacts, "b" contacts operate in reverse of circuit-breaker contacts.

7. Alarm Switch: One N.O. contact that operates only when circuit breaker has tripped.

2.05 ENCLOSURES

A. Enclosed Switches and Circuit Breakers: NEMA AB 1, NEMA KS 1, NEMA 250, and UL 50, to comply with environmental conditions at installed location.

1. Indoor Conditioned Spaces: NEMA 250, Type 1.

2. Indoor Unconditioned Spaces: Stainless steel.

3. Outdoor Locations: NEMA 250, Type 4X or Type 3R, stainless steel.

4. Other Wet or Damp, Indoor Locations: NEMA 250, Type 4X or Type 3R, stainless steel.

PART 3 – EXECUTION

3.01 INSTALLATION

A. Install individual wall-mounted switches and circuit breakers with tops at uniform height, unless otherwise indicated.

B. Comply with mounting and anchoring requirements specified in Section 26 05 48 – Vibration and Seismic Controls for Electrical Systems.

C. Temporary Lifting Provisions: Remove temporary lifting eyes, channels, and brackets and temporary blocking of moving parts from enclosures and components.

D. Install fuses in fusible devices. Orient fuses so that ratings are readable.

E. Comply with NECA 1.

3.02 IDENTIFICATION

A. Comply with requirements in Section 26 05 53 – Identification for Electrical Systems.

1. Identify field-installed conductors, interconnecting wiring, and components; provide warning signs.

2. Label each enclosure with engraved metal or laminated-plastic nameplate.

3.03 FIELD QUALITY CONTROL

A. Testing Agency: Comply with Section 26 08 10 – Testing of Electrical Systems.

B. Perform tests and inspections.

C. Acceptance Testing Preparation:

1. Test insulation resistance for each enclosed switch and circuit breaker, component, connecting supply, feeder, and control circuit.

2. Test continuity of each circuit.

D. Tests and Inspections:

1. Perform each visual and mechanical inspection and electrical test stated in the InterNational Electrical Testing Association (NETA) Acceptance Testing Specification. Certify compliance with test parameters.

2. Correct malfunctioning units on-site, where possible, and retest to demonstrate compliance; otherwise, replace with new units and retest.

E. Enclosed switches and circuit breakers will be considered defective if they do not pass tests and inspections.

F. Prepare test and inspection reports, including a certified report that identifies enclosed switches and circuit breakers and that describes scanning results. Include notation of deficiencies detected, remedial action taken, and observations after remedial action.

END OF SECTION

SECTION 26 42 01

CORROSION CONTROL AND CATHODIC PROTECTION

PART 1 – GENERAL

1.01 SUMMARY

A. Description: The Work includes, but is not limited to, providing all labor, materials, tools, equipment, and incidentals necessary for corrosion control and cathodic protection in accordance with the Contract Documents.

B. Section Includes:

1. Manufactured Units
2. Accessories
3. Coatings for Valves, Ductile Iron Pipe and Fittings, and Joints Testing

1.02 REFERENCES

A. ASTM International (ASTM):

1.	ASTM B418	Standard Specification for Cast and Wrought Galvanic Zinc Anodes
2.	ASTM D256	Standard Test Methods for Determining the Izod Pendulum Impact Resistance of Plastics
3.	ASTM D570	Standard Test Method for Water Absorption of Plastics
4.	ASTM D638	Standard Test Method for Tensile Properties of Plastics
5.	ASTM D1248	Standard Specification for Polyethylene Plastics Extrusion Materials for Wire and Cable

B. American Water Works Association (AWWA):

1.	AWWA C209	Cold-Applied Tape Coatings for the Exterior of Special Sections, Connections, and Fittings for Steel Water Pipelines
2.	AWWA C210	Liquid Epoxy Coating Systems for the Interior and Exterior of Steel Water Pipelines
3.	AWWA C214	Tape Coating Systems for the Exterior of Steel Water Pipelines
4.	AWWA C216	Heat-Shrinkable Cross-Linked Polyolefin Coatings for the Exterior of Special Sections, Connections, and Fittings for Steel Water Pipelines
5.	AWWA C302	Reinforced Concrete Pressure Pipe, Non-cylinder Type

C. Electronic Industry Association (EIA):

1. EIA RS-169 Thermoplastic Insulated and Jacketed Hook-Up Wire
2. EIA 214 Method for Calculation of Current Ratings on Hook-Up Wire

D. Insulated Cable Engineers Association (ICEA):

1. ICEA S-61-402 Thermoplastic-Insulated Wire and Cable for the Transmission and Distribution of Electrical Energy
2. ICEA S-66-524 Cross Linked Thermosetting Polyethylene Insulated Wire and Cable for the Transmission and Distribution of Electrical Energy

E. Institute of Electrical and Electronics, Inc. (IEEE):

1. IEEE 316 Standard Requirements for Direct Current Instrument Shunts

F. U.S. Military Specifications (MIL):

1. MIL-A-18001 Revision K: Anodes, Sacrificial Zinc Alloy

G. National Association of Corrosion Engineers International (NACE):

1. NACE RP 01 69 Standard Recommended Practice Control of External Corrosion on Underground or Submerged Metallic Piping Systems

H. National Electrical Manufacturers Association International (NEMA):

1. NEMA AB 1 Molded Case Circuit Breakers and Molded Case Switches
2. NEMA ICS 6 Industrial Controls and Systems: Enclosures
3. NEMA MR 20 Cathodic Protection Units
4. NEMA ST 1 Specialty Transformers (except General Purpose Type)

I. Underwriters Laboratories (UL):

1. UL 83 UL Standard for Safety Thermoplastic-Insulated Wires and Cables
2. UL 486A Wire Connectors and Soldering Lugs for Use with Copper Conductors

1.03 SUBMITTALS

A. General: Refer to Section 7.7 – Submittal Procedures, and Section 7.8 – Shop Drawings, Product Data, and Samples, for submittal requirements and procedures.

B. Submit the following for review and approval by HART:

1. Schematics and interconnecting shop drawings.

2. Connection diagrams and outlines shop drawings.

3. Assembly, erection, and installation shop drawings and data.

4. Manufacturer's Data:
   a. Submit manufacturer's data for coating materials proposed for use on shop coated ductile iron pipe and fittings, including materials for field papers.
   b. Submit manufacturer's data for epoxy coating system proposed for use in valves, including field repair coatings.
   c. Submit manufacturer's data for materials proposed for use with heat-shrinkable coatings.

5. Operations and Maintenance Manual for cathodic protection system.

6. Certificates of Compliance:
   a. Submit Certificate of Compliance for the shop applied coating on ductile iron pipe and fittings.
   b. Submit Certificate of Compliance for the shop applied epoxy coating system proposed for use on valves.
   c. Furnish a laboratory analysis guaranteeing that all anodes supplied meet the requirements of this Section.
   d. Catalog cuts, bulletins, brochures or data sheets for all equipment including test stations, wire/cable/test leads, exothermic welding equipment, insulating flange kits, anodes, anode junction boxes, wire identifiers ,and any other equipment to be installed.
   e. Certification that the equipment and materials proposed, meet the requirements of this Section.

7. Test reports.

8. Shop drawings detailing the proposed application of the materials proposed for use with heat-shrinkable coatings.

9. Parts and special tools list.

10. Qualifications of NACE International "Certified Corrosion or Cathodic Protection Specialist" including name, certification number, and a brief description of three similar projects with the name, telephone number ,and contact person of the owner.

1.04 QUALITY ASSURANCE

A. General: Refer to Section 7.10 – Quality Assurance, for quality assurance requirements and procedures.

1.05 SYSTEM STARTUP

A. Test bonded pipes for electrical continuity. Test the proper isolation of new cathodically protected pipes from the existing pipes. These tests shall be performed prior to burial of all pipe segments.

B. Perform cathodic protection system activation and confirmation of the cathodic protection system.

C. Test cathodic protection system for proper current output and level of cathodic protection provided to piping systems after installation of anodes and associated wiring and junction boxes, but before final street paving or construction of concrete sidewalks.

PART 2 – PRODUCTS

2.01 MANUFACTURED UNITS

A. Casing Pipe, Casing Spacer/Insulators, and End Seals:

1. Provide dielectrically insulating casing spacers to align cathodically protected pipe on center within casing pipes. Provide watertight closures between cathodically protected piping and casing pipes at each end of each casing. Closures shall be made with modular mechanical seals consisting of interlocking synthetic rubber links shaped to continuously fill the annulus between the pipe and sleeve.

2. Use high-density polyethylene (HDPE) casing pipe whenever possible.

B. Conduit: Provide conduit, raceway, and boxes as indicated on the Design Plans.

C. Epoxy Grout: Provide two-part, fast-seating, free-flowing, polyester resin anchoring grout.

D. Exothermic Weld Kits:

1. Provide exothermic weld kits supplied in complete sets from a single manufacturer; securely packaged and clearly labeled as to size, American National Standards Institute (ANSI) rating, style, and material.

2. Submit the manufacturer's product data for the exothermic weld kits proposed for use.

3. The shape and charge of the exothermic weld shall be chosen based on the following parameters:
   a. Pipe material
   b. Pipe size
   c. Wire material
   d. Number of strands
   e. Orientation of weld (vertical or horizontal)

E. Bonding Boxes:

1. Provide an enclosure in accordance with NEMA ICS 6.
   a. Mount shunts, terminal blocks, and bus bar on the backplate.

2. Provide thermoplastic flame retarding hookup wiring in accordance with EIA RS-169.

F. Terminals and Terminal Blocks:

1. Always use crimping tool and terminal blocks.

2. Size DC output terminal for not less than Number 2 American Wire Gage (AWG) cable.

3. Make connections with compression type ring tongue or spring cable (locking spade) terminals sufficiently strong to prevent their breakage under the conditions of vibration for which the equipment is designed.
   a. Slotted, flanged spade and hook terminals or terminals of the quick disconnecting type are not acceptable.
   b. If adjacent terminations permit contact, use insulation ferrules.
4. Provide terminal blocks with seven-post terminal polyester laminate board with two bonding straps.

G. Flange Insulating Kits:

1. For service up to 175 degrees Fahrenheit, use ring type, neoprene-faced phenolic insulating gaskets.
2. For service up to 250 degrees Fahrenheit, use ring type non-asbestos faced phenolic insulating gaskets suitable for 250 degrees Fahrenheit.
3. Insulating Sleeves:
   a. Material: High-density polyethylene 1/32-inch thickness
   b. Sleeve lengths: Two-flange thicknesses, including raised faces, plus gasket thickness, plus two insulating washer thicknesses, plus steel washer thicknesses.
   c. Provide oversized flange bolt holes.
4. Washers:
   a. Quantities: Two insulating washers and two steel washers are required for each sleeve.
   b. Insulating Washers: Linen electric grade, 1/8-inch thick.
   c. Steel Washers: Machine cut, deburred, and at least 1-1/4 inch in outside diameter by 11-gauge thick.
5. Test Bolts: 1/2-13 UNC by 2-inch silicon bronze cap screws.

H. Sacrificial Anodes:

1. Provide zinc anodes in accordance with ASTM B418, Type II, packaged anode with the following additional requirements:
   a. Provide Number 10 AWG, single conductor lead wire, factory connected to the anode with the connection sealed with cast epoxy resin encapsulation.
   b. Anode packaged in permeable cloth sack containing compacted backfill of a mixture consisting of 50 percent hydrated gypsum and 50 percent bentonite.

I. Cathodic Protection and Bonding Cables:

1. Provide cathodic protection cables in accordance with ICEA S-61-402, and have high molecular weight (HMW) Type CP polyethylene insulation not less than 7/64-inch thick.
2. Provide insulation material that is in accordance with ASTM D1248, Type I, Class C, Grade 5.

3. Provide cables having copper stranded conductors, sized as follows:
   a. For pipe leads to test station boxes: Number 10 AWG.
   b. From anodes to anode junction boxes: Number 10 AWG.
   c. For ductile iron pipe mechanical joint bonds: Number 4 AWG.

4. No intermediate splicing will be allowed, each wire run shall be continuous in length and free of joints or splices. Care shall be taken during installation to avoid punctures, cuts or other damage to the wire insulation. Damage of the insulation shall require replacement of the entire length of wire at no additional cost to HART.

J. Test Stations:

1. Provide post mount test stations in accordance with a weatherproof NEMA Type 3R terminal box in accordance with NEMA ICS 6, with a removable cover, test lead wires, and five terminals, installed approximately 3 feet above the surface.

2. Provide flush type test stations that are either 4-inch or 5-inch plastic pipe by approximately 18 inches long with heavy cast-iron loading covers and collars suitable for both curb and roadway installation.

3. Provide at-grade test stations with covers of 6-3/8 inch nominal diameter cast iron curb boxes.
   a. Provide a top section nominally 18 inches long and flanged to prevent setting.
   b. Flush grade traffic test boxes shall be traffic rated.
   c. Provide a cover permanently marked with the cast or embossed word “CP TEST.”

K. Stray Current Drainage and Negative Switchboard:

1. Provide a free-standing, metal-enclosed switchboard suitable for indoor service, and including the following equipment:
   a. Negative switches
   b. DC negative bus and bus connections
   c. Stray current corrosion control equipment
   d. Drainage bus connections to stray current corrosion control equipment
   e. Negative return cable terminal connectors

2. Switchboard Enclosure:
   a. Provide a metal-enclosed, rigid, self-supporting, self-contained, ventilated steel structure, assembled as one unit, switchboard construction.
   b. Design and arrange switchboard to provide convenient access to all components for normal operation and maintenance.
   c. Provide terminal connectors for connecting the switchboard metal enclosure to the substation ground bus.
   d. Provide an access opening for a future negative bus extension covered by a removable metal cover.

3. Include the following stray current corrosion control equipment:
   a. Cable connector
   b. Fuse holder and current limiting fuse

c. Shunt
d. Variable resistor
e. Reverse current switch
f. Disconnect switch
g. Connection to drainage bus

2.02 ACCESSORIES

A. Reference Electrodes: Provide permanent copper-copper sulfate electrode reference electrodes in permeable cloth sack suitable for direct burial. Electrodes shall be guaranteed by the supplier for 15 years service in the environment in which they shall be placed. Reference electrode lead wire length shall be sufficient to extend from the electrode to the test station box without any splices.

2.03 COATINGS FOR VALVES, DUCTILE IRON PIPE AND FITTINGS, AND JOINTS

A. Valves:

1. Coat all exterior ferrous parts of valves, except finished or bearing surfaces, with liquid epoxy in accordance with ANSI/AWWA C210.

2. Submit manufacturer's data for epoxy coating system proposed for use on valves, including field repair coatings.

3. Submit Certificate of Compliance for the shop applied epoxy coating system stating that all materials and workmanship complied with the acceptable parameters for coating system components, surface preparation, coating application, and coating repair at the shop.

B. Ductile Iron Pipe: Shop coat all ductile iron pipes in accordance with ANSI/AWWA C214 with the following supplemental requirements:

1. Provide a coating system consisting of four components: primer, inner layer, and two outer layers.
   a. Outer layers: White.
   b. Nominal applied coating system thickness: 80 mils.

2. Provide straight edges or tapered cut back as recommended by the manufacturer and applicator.
   a. Provide 6-inch cutbacks from straight (spigot) ends.
   b. Provide cutbacks from bell ends to the shoulder of the bell.
   c. Provide cutbacks from flanged ends 2 inches from the back of the flange.

C. Ductile Iron Fittings: Coat all ductile iron pipe fittings in accordance with ANSI/AWWA C210 (as specified above for valves), or shop coat with cold-applied tape in accordance with ANSI/AWWA C209.

1. For coating in accordance with ANSI/AWWA C209, the following additional requirements shall apply:
   a. Provide Type II tape with a nominal applied total thickness of 60 mils.
   b. Provide straight edged or tapered cut backs as recommended by the manufacturer and applicator.
      1) Provide 6-inch cutbacks from straight (spigot) ends.
      2) Provide cut backs from bell ends to the shoulder of the bell.
      3) Provide cut backs from flanged ends 2 inches from the back of the flange.

D. Pipe Joints:

1. Field coat all underground ductile iron pipe joints as shown with heat-shrinkable cross-lined polyolefin coatings in accordance with ANSI/AWWA C216 with the following additional requirements:
   a. Heat-shrinkable: Type I or Type II.
   b. Filler materials: Use those recommended by the manufacturer and accepted by HART.
   c. Repair materials: Type II.
2. Supply materials in kits, complete with filler materials, for each joint.
   a. Package kits for protection from mechanical damage, and clearly mark kits with the pipe diameter and type of joint.
3. Provide training for joint coating personnel by manufacturer's representative as in accordance with ANSI/AWWA C216.

E. Casing Pipe for Ductile Iron Pipe: Do not coat casing pipe.

PART 3 – EXECUTION

3.01 INSTALLATION

A. Welded Connections:

1. Make all connections between copper conductors and all splices between copper conductors with exothermic welds.
2. Make all connections in accordance with the manufacturer's recommended procedures, materials, and equipment, and with the following additional requirements:
   a. Do not allow the hot mold or welding debris to contact coated pipe.
   b. Remove all slag from the mold after each weld.
      1) Clean the mold cover after every 6 to 10 welds.
   c. Remove the slag from the weld after it has cooled.
      1) Test all welds to pipe by striking at a 45 degree angle with a 2-pound hammer while pulling the wire.

2) Remove and replace defective welds.

d. Cover the entire area of test station wire welds with a weld cover in accordance with the manufacturer's instructions.

1) Coat all wire splices with a splice insulation kit in accordance with the manufacturer's instructions; use of splice kits after their expiration date will not be permitted.

e. Do not coat welds on bond wires across pipe joint which will be covered with heat-shrinkable sleeves.

B. Corrosion Control Bonding:

1. Electrically bond mechanical joints in buried metallic piping, concrete reinforced structures.

a. Bond all push-on and mechanical joints on cathodically protected ductile iron pipe.

2. Interconnect piles, and columns, using 4/0 AWG insulated copper conductor exothermically welded to piles and columns where shown.

3. Provide conduits and test wires from each bonded facility and terminate at test stations.

C. Corrosion Control Isolation:

1. Install dielectric insulation for piping complete with coating, test wires, and test boxes.

2. Insulated Flange Unions:

a. Install flange insulating kits and insulated unions at locations shown, complete with test stations.

1) Install flange insulating kits in accordance with the manufacturer's instructions and the following:

a) Remove all cutting oils, lubricants, metal filings, and other contaminants or debris from the flanges immediately prior to assembly.

b) Mate and align flange pairs so they are parallel and concentric to within 0.10 inch without external loading or springing.

c) Center bolt sleeves in each bolt hole to ensure that the sleeves will extend through the holes and both insulating washers.

b. Torque bolts in a three step progressive manner using a star pattern and increasing the torque after each pass until the final torque recommended by the manufacturer is met.

1) Exercise care to prevent cutting the bolt sleeves during the tightening process.

c. Apply a polyamide cured epoxy resin coating to the internal surfaces of pipe on each side of the insulated flanges and unions for a distance equal to twice the pipe diameter as measured from the center line of the flange.

1) Prepare the internal pipe surface, and apply the coating in accordance with the manufacturer's recommendations in two coats to achieve a total dry film thickness not less than 16 mils.

d. Do not electrically bond insulated joint.

3. Coating Underground Ductile Iron Pipe Joints: After electrical bonding but before installation of external restrains, such as clamps and tie-rods, coat underground joints on cathodically protected ductile iron pipe.
   a. Apply heat-shrinkable sleeves to all joints in accordance with the manufacturer's instructions and the following:
      1) Dress bond wires neatly to follow the contours of the joint to provide as smooth a surface as possible.
      2) Install filler material at all sharp bends and other protrusions to establish a smooth contour and eliminate air pockets beneath the heat-shrinkable sleeve.
      3) Roughen the tape coating that will be under the sleeve with the coarse sandpaper.
      4) Allow 30 minutes, minimum, before backfilling sleeved joints.
      5) At the direction of HART, remove and replace any sleeve if installation results in the presence of air pocket, wrinkles, or is otherwise unsatisfactory.

4. Coating Bare Metal Surfaces:
   a. Prior to coating, remove all residual films with suitable solvents and remove all adherent debris and rust with a wire brush.
   b. Thoroughly cover all bare metal surfaces such as tie-rods, clamps, and similar items with bitumastic.
      1) Apply bitumastic in accordance with the manufacturer's instructions using two coats to achieve a final dry film thickness of 20 mils.
      2) Do not substitute roofing tag or other similar products for bitumastic.
   c. Allow bitumastic to dry completely before backfilling.

5. Pipe Sleeve Closures:
   a. Prior to installing pipe sleeve closures, clean the pipe to ensure that no debris remains between the pipe and its sleeve.
   b. Install pipe sleeve closures in accordance with the manufacturer's printed instructions.
   c. Use epoxy grout to fill voids or openings at pipe entries where sleeve seal insulators cannot be utilized.

6. Casing Spacers and End Seals:
   a. Install casing spacers and end seals, complete with test stations.
   b. Make installation in accordance with the manufacturer's instructions.
   c. Ensure that the carrier pipe is concentric within the casing pipe and that there is a minimum 1-inch annulus between the pipe and its casing.
   d. Ensure that no debris is left in the casing.

7. Electrical Contact Separators:
   a. Install electrical contact separators on cathodically protected pipe when foreign metal or reinforced concrete structures lie within 1-foot vertically of the cathodically protected pipe.

1) Field determines contact separator locations.

b. Contact with Concrete:

1) Install a wrap of pipeline felt around cathodically protected pipe which will be in contact with concrete anchor blocks, thrust blocks, or encasement.

2) If cathodically protected pipe is to rest on a concrete support, place an electrical contact separator between the pipe and support.

D. Anodes:

1. Install zinc anodes in accordance with NACE RP-01-69

a. Wet packaged anode thoroughly before backfilling the hole.

1) Use native soil, free from stones and bricks, for backfilling.

2) Do not use sand or slurry cement for backfill on anodes.

2. Install anode junction and test boxes.

3. Connect anode lead wires to header cable or in test boxes.

E. Test Stations:

1. Install at grade, flush wall mount, post mount, and roadway test boxes at required locations.

2. Install blocking and concrete pad to provide a rigid installation.

3. Route all cabling so it will not cause damage to the wire installation.

4. Allow enough slack to compensate for soil movements and to permit extension of the wires 6 inches maximum above the box for connection and tests.

5. Coil excess wire in the box.

6. The following requirements also apply:

a. Install test wires, anodes, and permanent reference electrodes.

b. Install permanent reference electrode in accordance with the manufacturer's instructions.

c. Where test boxes will offset from pipes more than 5 feet, protect test wires in conduit.

d. Field locates at-grade test boxes.

1) Place test boxes in accessible locations, such as sidewalks, adjacent to buildings or paved areas other than roadways.

2) Provide HART with detailed, proposed locations for each at-grade test box as shown on shop drawings.

e. Set test boxes in unpaved locations in a concrete pad.

3.02 FIELD QUALITY CONTROL

A. Perform inspection and testing of work associated with the installation of the cathodic protection system under the supervision of a NACE certified Corrosion or Cathodic Protection Specialist.

This page intentionally left blank.

SECTION 26 42 02

CORROSION CONTROL SYSTEM TESTING

PART 1 – GENERAL

1.01 SUMMARY

A. Description: The work of this Section includes but is not limited to providing all labor, materials, tool, equipment, and incidentals necessary for corrosion control system testing in accordance with the Contract Documents.

B. Section Includes:

1. Test Equipment

1.02 REFERENCES

A. ASTM International (ASTM):

1. ASTM G165 — Standard Practice for Determining Rail-to-Earth Resistance

B. National Association of Corrosion Engineers International (NACE):

1. NACE RP 01 69 — Standard Recommended Practice Control of External Corrosion on Underground or Submerged Metallic Piping Systems

C. National Fire Protection Association (NFPA):

1. NFPA 70 — National Electrical Code

1.03 SUBMITTALS

A. General: Refer to Section 7.7 – Submittal Procedures, and Section 7.8 – Shop Drawings, Product Data, and Samples, for submittal requirements and procedures.

B. Submit the following information:

1. Layout of each system being tested, showing locations of system components, including test stations.

2. Instrument hook-up for each test.

3. A list of the instruments proposed to be used to perform the testing in accordance with Article 2.01A herein.

4. Test results, including Certificates of Inspection.

5. Qualifications of NACE International certified Corrosion Specialist who will supervise the testing including name, certification number, and a brief description of three similar projects with the name, telephone number, and contact person of the owner. Corrosion Specialist must have at least 5 years of experience of supervising corrosion control system testing.

1.04 QUALITY ASSURANCE

A. General: Refer to Section 7.10 – Quality Assurance, for quality assurance requirements and procedures.

PART 2 – PRODUCTS

2.01 TEST EQUIPMENT

A. Submit a list of the instruments proposed to be used to perform the testing required by this Section, and include the manufacturer's name, type of instrument, model number, serial number, and current calibration certificate for each instrument.

B. DC Voltmeter: Use a multi-scale dc voltmeter with the following features:

1. Type: Center zero or digital.
2. Minimum sensitivity: 1 megaohm per volt.
3. Accuracy: Accurate within 1 percent of full scale.
4. Full scale ranges:
   a. 0 to 10 millivolts
   b. 0 to 100 millivolts
   c. 0 to 1 volt
   d. 1 to 10 volts
   e. 0 to 100 volts

C. DC Ammeter: Use a multi-scale dc ammeter, or a millivolt meter and shunts, with the following features:

1. Maximum shunt voltage drop: 20 millivolts
2. Accuracy: Accurate within 1 percent of full scale
3. Full scale ranges:
   a. 0 to 1 ampere
   b. 0 to 10 amperes
   c. 0 to 100 amperes

D. Resistivity meter: Use a self-contained synchronous vibrator, battery-powered instrument capable of providing readings unaffected by the resistance of leads or probes.

E. DC power Source:

1. Use a 6 or 12 volt automotive type wet cell battery or nickel cadmium rechargeable dry type battery.
2. For circuits having a high internal resistance; use multiple batteries a dc generator, or portable cathodic protection rectifier.

F. Test wires:

1. Conductor: Stranded copper of assorted sizes and lengths to suit test conditions.
2. Insulation: 600 volt, minimum, neoprene insulation in perfect condition.

G. Steel probes for making electrical contact with buried structures in absence of test stations.

H. Slide-wire resistors:

1. Range: 0-400 ohm.
2. Capacity: 15 amperes over the full range of adjustment.

I. Reference electrode: Use a saturated cooper-copper sulfate reference half cell with a ceramic porous plug.

1. Length: 5 inches.
2. Diameter: 1 3/8 inches or 3 inches.

J. Holiday detector: Ring type, sizes as needed.

K. Miscellaneous Tools: As required for making wire connections, splicing, and similar operations.

PART 3 – EXECUTION

3.01 FIELD QUALITY CONTROL

A. Electrical Continuity Testing:

1. Test the following items for electrical:
   a. Electrically bonded mechanical and bell and spigot pipe joints.
      1) Test pipe joints before and after backfilling is completed.
      2) Test individual and multiple bonds.
   b. Concrete steel reinforcement in guideway decks, columns, shafts, footings, bridges, station platforms, retaining walls and other reinforced concrete structure.
2. Continuity Testing – Single Bond:
   a. Test Procedure:
      1) Connect the instruments and power source across the bond to be tested as shown in Figure 264202-1, “Single Bond and Multiple Bonds in Parallel.”
         a) Use separate sets of contact points and wires to the structure for voltage and current circuits.
      2) Beginning with highest scales on the voltmeter and ammeter, close the switches and observe the meter readings.
      3) Reduce the meter ranges until the lowest possible scale is reached, and adjust the current level to less than 5 amperes.
      4) Read the ON values of both voltage and current.
      5) Break the circuit and immediately read both voltage and current OFF values.

6) Record the ON and OFF readings on a data sheet, and determine the incremental current and voltage changes.
   a) Obtain a minimum of three readings to ensure accuracy.
7) Determine the bond resistance of a single bond and the theoretical resistance of a single bond using the equations in Figure 264202-1, "Single Bond and Multiple Bonds in Parallel," and record the result for each calculation.

b. Acceptance Criteria:
   1) The actual bond resistance of a single bond may not exceed the calculated theoretical resistance of a single bond by more than 10 percent.

3. Continuity Testing – Multiple Bonds in Parallel:
   a. Test Procedure:
      1) Where two structures are bonded by multiple bonds in parallel, test the multiple bonds as specified for a single bond in Article 3.01.A.2.a herein.
      2) Record resistance readings obtained.
      3) Determine the bond resistance of multiple bonds in parallel using the equation for resistance of a single bond and the theoretical resistance of multiple bonds in parallel using the equation for theoretical resistance between structures connected by multiple bonds in parallel in Figure 264202-1, "Single Bond and Multiple Bonds in Parallel," and record the result for each calculation.
   b. Acceptance Criteria: The measured bond resistance of multiple bonds in parallel may not exceed the calculated theoretical resistance of multiple bonds in parallel by more than 10 percent.

4. Continuity Testing – Multiple Bonds in Series:
   a. Test Procedure:
      1) Connect the instruments and power source across the multiple bonds in series to be tested as shown in Figure 264202-2, "Multiple Bonds in Series."
         a) Use separate sets of contact points and wires to the structures for voltage and current circuits.
      2) Perform the test as specified for the single bond test in Article 3.01.A.2 herein.
      3) Determine and record the actual resistance between points A and B shown on Figure 264202-2, "Multiple Bonds in Series," including the bonds in series, as specified for the single bond test in Article 3.01.A.2. herein.
      4) Calculate the theoretical resistance of the multiple bonds in series using the equation in Figure 264202-2, "Multiple Bonds in Series," and record the result for the calculation.

b. Acceptance Criteria: The measured total resistance measured between points A and B may not exceed the theoretical resistance of the sum of the bonds plus the theoretical resistance of the structure between points A and B by more than 10 percent.

5. Reinforcing Steel Electrical Continuity Testing:
   a. Test Procedure:
      1) Test reinforcing steel electrical continuity before and after pouring concrete.
      2) Connect the instruments and power source to two adjacent test stations wires, or to the top and bottom of reinforcing members for columns and shafts to test steel reinforcement electrical continuity as shown in Figure 264202-3, **"**Reinforcing Steel Continuity Test."
         a) Use separate sets of wires for voltage and current circuits.
      3) Perform the test as specified for the single bond resistance test in Article 3.01.A.2.a.1) through 3.01.A.2.a.6) herein.
      4) Calculate the longitudinal resistance of the welded reinforcing steel by dividing the summation of change in voltage by the summation of change in current.
   b. Acceptance Criteria: The measured concrete steel reinforcement resistance should not exceed the calculated theoretical resistance by more than 10 percent.
      1) Theoretical resistance of steel reinforcement may be determined by multiplying previously measured resistance of single rebar to the number of welded longitudinal rebar connected together at ends of test section by collector bars.

B. Testing Insulating Joints:

1. Test the following installed insulating devices.
   a. Insulated flanges and unions.
      1) Test buried flanges and fittings before and after backfilling is completed.
      2) Test exposed flanges and fittings before and after installation is completed.
      3) Test each flange or union individually, using existing test wires.
   b. Casing and sleeve insulation.
      1) Test casing and sleeve insulation prior to backfilling.
      2) Test each casing or sleeve individually.

2. Test procedure:
   a. Set up the instrumentation as shown in Figure 264202-4, **"**Insulating Joint."
      1) If the pipe length is too short for properly spacing the test connection as shown, use the maximum possible spacing for the L-value.
   b. With switches S1 and S2 open, read, and record the value of E0.
   c. Close switch S1 while keeping switch S2 open, read , and record current I1 and voltage E1.
   d. Calculate the calibration factor, K, for the millivolt shunt using the equation shown in Figure 264202-4, "Insulating Joint."
   e. With switches S1 and S2 open, again read and record the value of E0.

f. Close switch S2 while keeping switch S1 open, read, and record current I2 and voltage E2.

g. Calculate ΔE2, the difference between E0 and E2.

h. Calculate and record the percentage of insulating joint electrical leakage using the equation shown in Figure 264202-4, "Insulating Joint."

3. Acceptance Criteria: The measured insulating joint electrical leakage may not exceed the theoretical percentage of insulating joint electrical leakage calculated by more than 2 percent.

C. Cathodic Protection System Testing for Steel and Ductile Iron Structures:

1. Test procedure: Test cathodic protection systems in accordance with NACE RP 01 69.

2. Acceptance Criteria: Use NACE RP 01 69 criteria for determining the adequacy of protection on cathodically protected structures, and use one of the following as selected by the corrosion engineer:

a. A negative polarized potential of at least minus 0.85 volts as measured between the structure and a saturated copper-copper sulfate reference electrode contacting the earth directly over the structure.

b. A minimum polarization voltage shift of 100 millivolts as measured between the structure and a saturated copper-copper sulfate reference electrode contacting the earth directly over the structure.

1) Determine this polarization voltage shift by interrupting the protective current and measuring the polarization decay.

2) When the protective current is interrupted, use an immediate shift as the base reading from which to measure polarization decay.

c. If the acceptance criteria are not met, the corrosion engineer should identify the cause of cathodic protection system inefficiency in each particular area. The Contractor shall take all actions necessary to correct the cause of the inefficiency in order to establish cathodic protection system meeting acceptance criteria at no cost to HART. Subsequent to such corrective action(s), repeat the tests.

D. Insulating Coating Testing:

1. Inspect the coating using both a visual inspection and an electrical spark holiday detector throughout the pipe after coating application.

2. Do not allow the holiday detector to remain stationary while the power is ON or to travel at a speed exceeding 0.3 meter per second.

3. Voltage: 5,000 volts, minimum, or as recommended by manufacturer.

4. Whenever defects are discovered by either visual examination or the holiday detector, clearly indicate the locations of the defects by using a circular chalk mark or cross.

5. Repair any damaged or defective coating and retest the repaired area.

6. Do not backfill prior to obtaining acceptance of the coating.

E. Track-to-earth resistance acceptance tests:

1. Tests should be conducted in accordance with ASTM G165, "Standard Practice for Determining Rail-to-Earth Resistance."

2. Description: The test shall be carried out after the track has been completed and cleaned but before any electrical bonds are connected.

3. The testing personnel must be capable of modifying the procedure specified herein to suit actual field conditions should such modification become necessary.

4. Set up instrumentation as shown in Figure 264202-5, "Track-To-Earth Resistance Test":
   a. Measure the length (L) of tested section of track. This section shall be isolated from the rest of the track.
   b. The rails shall be bonded by stranded copper cable. Oxide and dirt shall be removed from the rails before any electrical connections are made. Ensure that earth connections to terminals are good.
   c. Close switch in circuit. Read and record current (I) and voltage (E).
   d. Calculate and record value of track-to-earth resistance (Rt).
   e. Calculate and record value of track-to-earth resistance per 1,000 feet (Rt 1,000).

5. Acceptance criteria:
   a. The resistance per 1,000 feet of track (two rails) must be achieved of 500 ohms minimum.
   b. Corrective action shall be taken at the Contractor's expense to remedy the unacceptable condition. Subsequent to corrective action(s), repeat the tests.

F. Submit test results in an approved format from the tests specified and performed.

1. Include Certificates of Inspection.

Figure 264202-1

SINGLE BOND AND MULTIPLE BONDS IN PARALLEL

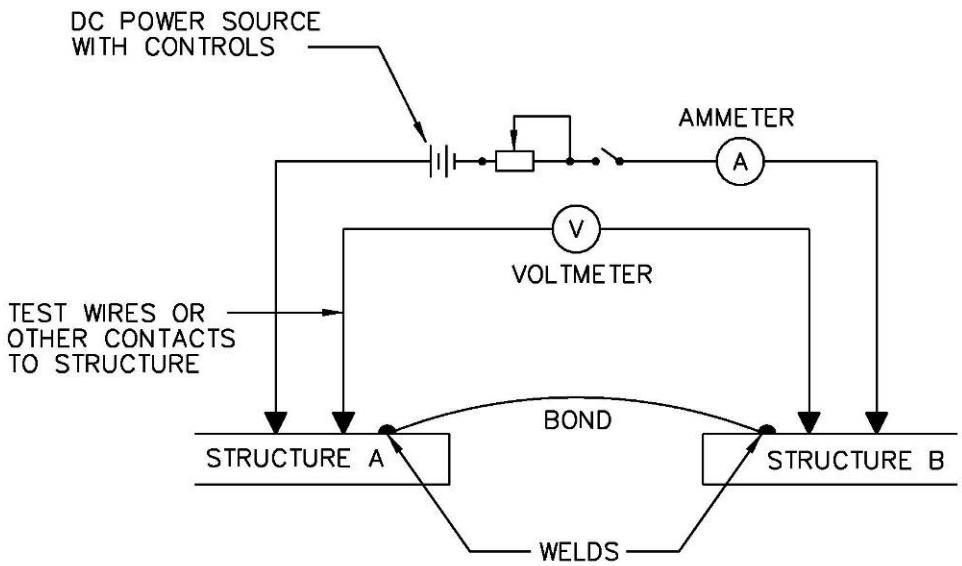

FORMULA FOR DETERMINING RESISTANCE OF SINGLE BOND USING TEST DATA:

$R_T = \Delta E / \Delta i$

WHERE R_T = RESISTANCE OF ONE BOND (OHM)
ΔE = INCREMENTAL CHANGE IN POTENTIAL (VOLT)
Δi = INCREMENTAL CHANGE IN CURRENT (AMPERE)

FORMULA FOR CALCULATING THEORETICAL RESISTANCE OF SINGLE BOND:

$Rc = (L) \times (R_L)$

WHERE Rc = CALCULATED RESISTANCE OF ONE BOND (OHM)
L = LENGTH (METER)
R_L = RESISTANCE (OHM/METER) FROM WIRE TABLE FOR BOND WIRE USED

FORMULA FOR CALCULATING THEORETICAL RESISTANCE BETWEEN STRUCTURES CONNECTED BY MULTIPLE BONDS IN PARALLEL:

$Rcp = Rc/N$

WHERE Rc = CALCULATED RESISTANCE OF MULTIPLE BOND WIRE IN PARALLEL (OHM)
Rc = CALCULATED RESISTANCE OF ONE BOND (OHM)
N = NUMBER OF BONDS IN PARALLEL

NOTE:

1. VOLTMETER CONTACTS TO STRUCTURE MUST BE CLOSE ENOUGH TO WELDS TO ENSURE THAT STRUCTURE RESISTANCE IS NOT SIGNIFICANT.

Figure 264202-2

MULTIPLE BONDS IN SERIES

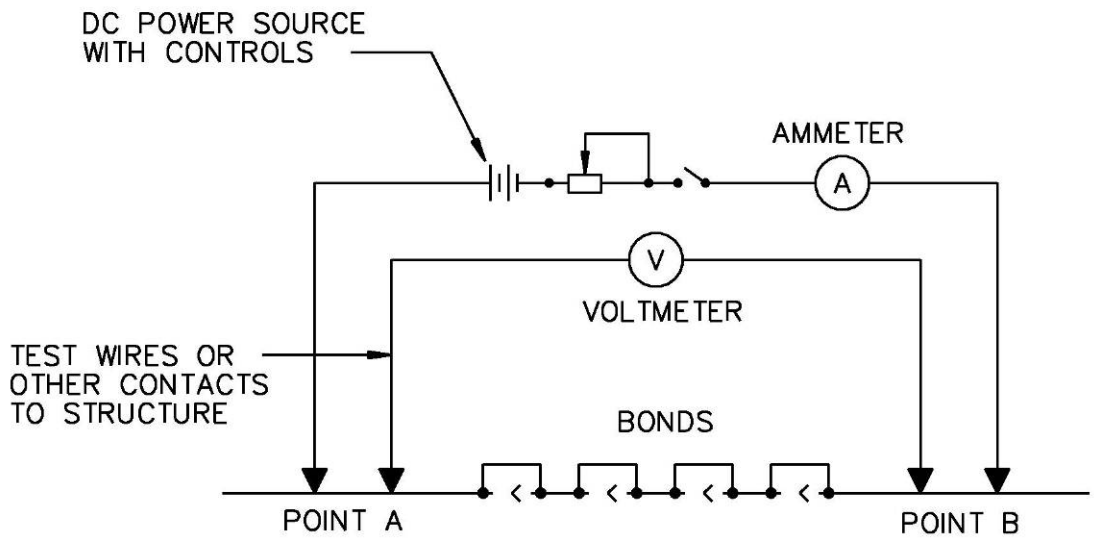

FORMULA FOR CALCULATING THEORETICAL RESISTANCE OF STRUCTURE WITH MULTIPLE BONDS IN SERIES:

$$Rcs = Rc \times N \times \rho \frac{L}{A}$$

WHERE Rcs = CALCULATED RESISTANCE OF A NUMBER OF BONDS IN SERIES (OHM)
Rc = CALCULATED RESISTANCE OF ONE BOND (OHM)
N = NUMBER OF BONDS IN SERIES
ρ = RESISTIVITY OF STRUCTURE (OHM–cm)
L = LENGTH OF STRUCTURE (cm)
A = CROSS SECTIONAL AREA OF STRUCTURE $(cm)^2$

Figure 264202-3

REINFORCING STEEL CONTINUITY TEST

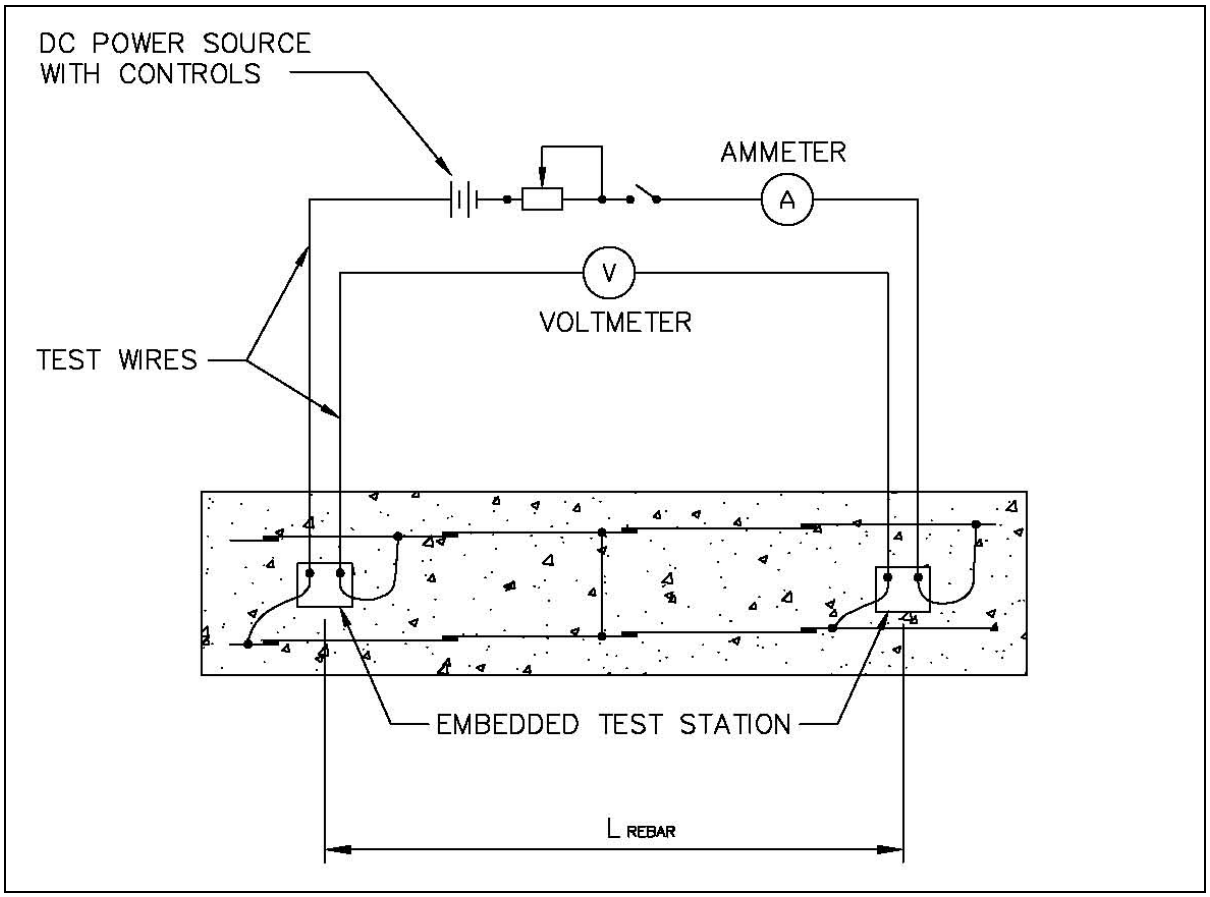

Figure 264202-4

INSULATING JOINT

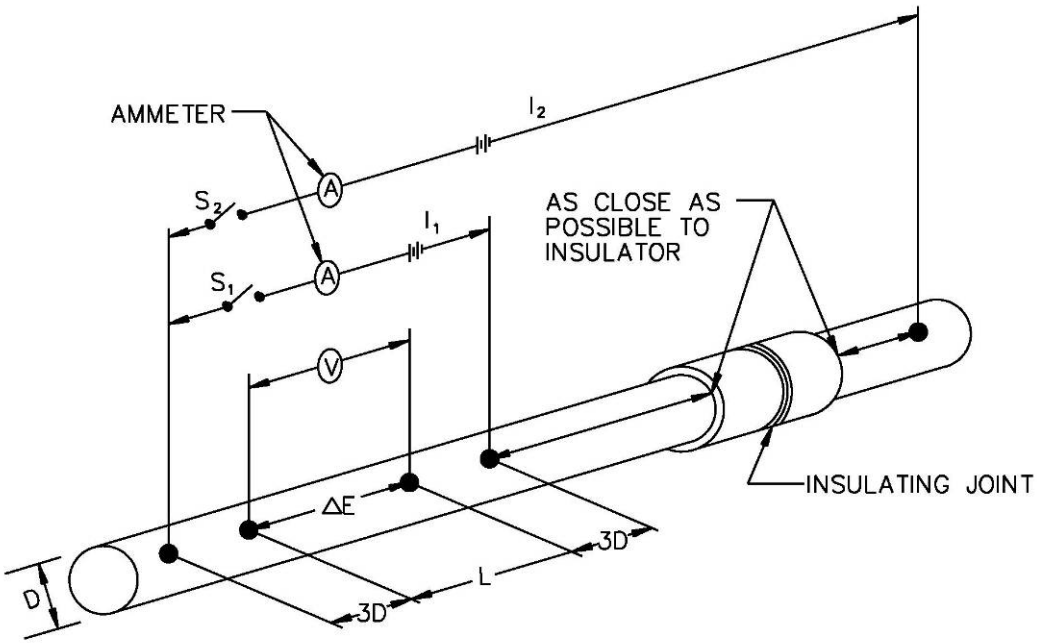

PIPE SIZE	L (MIN)
4" AND SMALLER	15 ft
6" – 10"	30 ft
12" – 18"	50 ft
LARGER THAN 18"	80 ft

CALIBRATION OF MULTIVOLT SHUNT:

$$K = \frac{I}{\Delta E_1} = \frac{\text{CURRENT (AMP)}}{\text{POTENTIAL (MILLIVOLT)}}$$

WHERE $\Delta E_1 = E_1 - E_0$ (S_1 CLOSED, S_2 OPEN)

CALCULATION OF INSULATING JOINT ELECTRICAL LEAKAGE:

$$\%\ \text{LEAKAGE} = \frac{\Delta E_2 \times K \times 100}{I_2}$$

WHERE $\Delta E_2 = E_2 - E_0$ (S_1 OPEN, S_2 CLOSED)

Figure 264202-5

TRACK-TO-EARTH RESISTANCE TEST

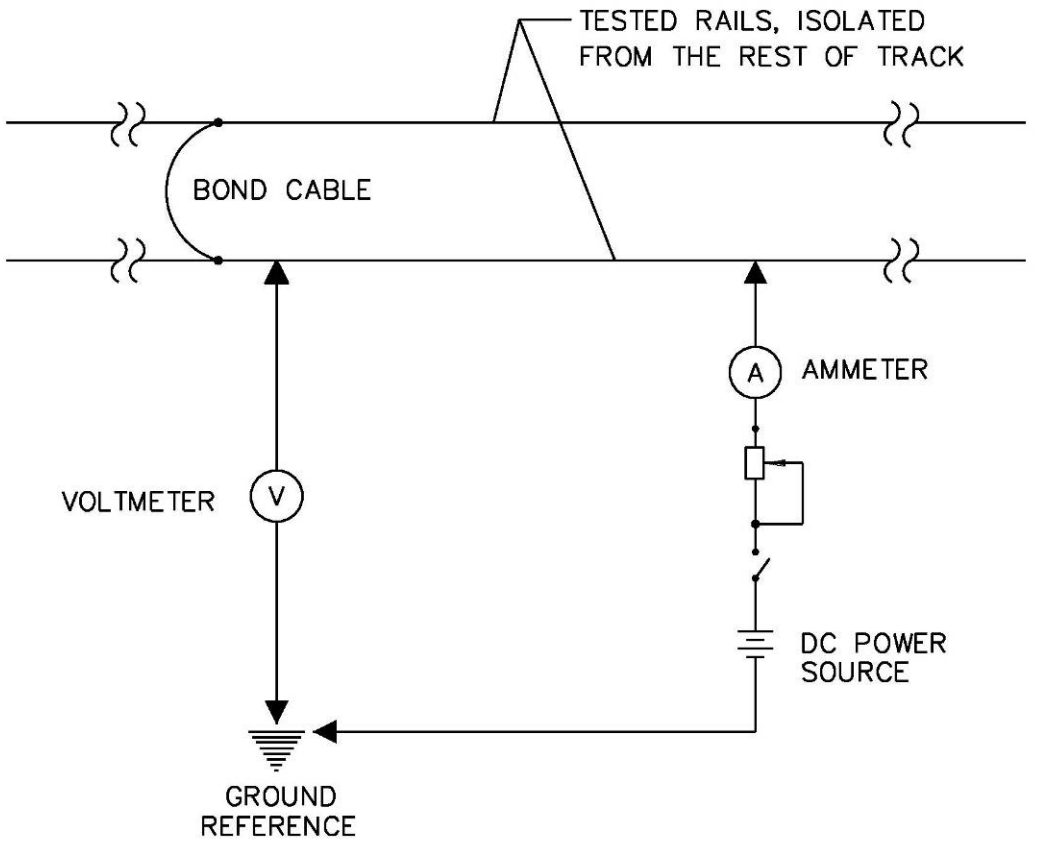

FORMULA FOR DETERMINING TRACK–TO–EARTH RESISTANCE:

$$R_{T1000} = \frac{R_T \times L}{1000} \text{ OHMS PER 1,000 FEET}$$

WHERE R_{T1000} = TRACK–TO–EARTH RESISTANCE PER 1000 FEET (OHM/1000 FT)

R_T = CALCULATED RESISTANCE OF TESTED TRACK SECTION (OHM)

L = MEASURED DISTANCE (FT)

END OF SECTION

SECTION 26 56 19
ROADWAY LIGHTING

PART 1 – GENERAL

1.01 SUMMARY

A. Description: The Work of this Section includes constructing complete and operational lighting systems, or the required portion thereof as specified in the Contract:

1. Roadway Lighting, Parking Area Lighting and Sign Lighting Systems:
   a. Furnish and install, including materials necessary for operating and controlling roadway lighting, parking area lighting and sign lighting systems.
   b. Relocate existing roadway lights, including materials necessary to reconnect relocated lights to existing light circuits.
   c. Salvage existing roadway, parking area and sign lighting equipment.
2. Furnish, install, maintain, and remove temporary lighting under structure falsework.
3. Furnish, install, maintain and remove temporary roadway lighting.

B. Section Includes:

1. Roadway and Sign Lighting System
2. Falsework Lighting

C. Related Sections:

1. Section 02 41 00 – Demolition
2. Section 03 20 00 – Concrete Reinforcing
3. Section 03 30 00 – Cast-In-Place Concrete
4. Section 26 05 19 – Low-Voltage Electrical Power Conductors and Cable
5. Section 26 05 23 – Underground Ducts and Raceways for Electrical Systems

1.02 REFERENCES

A. All work shall be performed and completed in accordance with the standard drawings and specifications of the jurisdiction in which the roadway, sign, and falsework lighting systems are being constructed. The Contractor shall be responsible for obtaining all such standards and for compliance with such standards as applicable.

B. State of Hawaii Department of Transportation Standard Specifications (HSS):

1. HSS Section 202 — Removal of Structures and Obstructions
2. HSS Section 204 — Excavation and Backfill for Miscellaneous Facilities
3. HSS Section 503 — Concrete Structures
4. HSS Section 622 — Roadway and Sign Lighting System

5. HSS Section 633 Falsework Lighting

C. Standard Specifications for Public Works Construction 1986

1.03 SUBMITTALS

A. General: Refer to Section 7.7 – Submittal Procedures, and Section 7.8 – Shop Drawings, Product Data, and Samples, for submittal requirements and procedures.

B. Submit materials and equipment list for roadway and sign lighting systems in accordance with HSS Subsection 622.03(A) – Equipment List and Drawings.

1.04 QUALITY ASSURANCE

A. General: Refer to Section 7.10 – Quality Assurance, for quality assurance requirements and procedures.

PART 2 – PRODUCTS

2.01 MATERIALS

A. Roadway and Sign Lighting System (for roadways under State Jurisdiction): Conform to HSS Subsection 622.02 – Materials.

B. Roadway Lighting and Parking Area Lighting Systems (for roadways under City and County Jurisdiction): Conform to the Standard Specifications, as specified herein and on the Drawings.

1. Poles shall be hot-dipped galvanized steel and shall be designed in conformance with AASHTO 2002 Interim Revisions to Standard Specifications for Structural Supports for Highway Signs, Luminares and Traffic Signals" and shall be designed to meet a sustained wind speed of 105 mile per hour and a 1.3 gust factor.

2. Bracket arms shall be hot-dipped galvanized steel upsweep type, 4- 6- or 8-feet in length as specified on the drawings.

3. Where specified for provision on the Drawings, transformer bases shall be hot-dipped galvanized steel. Design shall conform to the details in the Drawings.

4. Anchor bolts, nuts and washers shall be hot-dipped galvanized steel with grease or bituminous coating applied to all exposed surfaces after installation.

5. Luminaires shall be cast aluminum, rear-entry with a tempered glass, cut-off refractor and shall have a photo-electric cell receptacle and weather-proof shorting cap.

6. Ballast shall be constant-wattage, auto-transformer type. Ballast shall start and operate the high pressure sodium lamp, wattage as indicated on the drawings, from the 120/240 volt, 60 Hz power source. Ballast and starting aid shall protect itself against normal lamp failure modes. Ballast shall operate with the lamp in an open-circuit or short-circuit condition for 6 months without significant loss of ballast life. Lamp current crest factor shall not exceed 1.8 for a plus/minus line voltage variation at any lamp voltage, for the life of the lamp.

7. Lamps shall be clear, mogul-base high pressure sodium. Lamp wattage shall be as specified on the drawings.

8. All current-carrying conductors for City roadway lighting systems shall be copper, 600 Volt, with RHW-USE insulation. Grounded circuit conductors (neutral) shall be copper with 600 Volt, white RHW-USE insulation, substitution of white tape over black insulation is not acceptable.

9. Photoelectric control for City roadway lights shall be Fisher-Pierce 6690-BSPS or approved equal.

C. Ground rods, grounding clamps and ground wire shall conform to Specification Section 26 05 26.

D. Falsework lighting: Conform to HSS Subsection 633.02 – Materials.

E. Temporary roadway lighting shall conform to materials in Item A above. Wiring for temporary roadway lighting systems shall be triplex cable with two (2) XLPE insulated aluminum conductors and one aluminum conductor, steel reinforced (ACSR) neutral messenger.

F. Conductor tags shall be rigid, non-ferrous with machine embossed labels on both sides of tag and attached with non-ferrous wire to feeders and branch circuits in all pullboxes. Labels shall indicate circuit designation as indicated on the Drawings.

G. Wood poles used for temporary roadway lighting shall be Class 3 minimum, penta-chlorohexane treated for termite resistance. Minimum embedment shall be 5’-0” below finish grade.

PART 3 – EXECUTION

3.01 ROADWAY AND SIGN LIGHTING SYSTEM

A. Furnish and install roadway and sign lighting system in accordance with HSS Subsection 622.03 – Construction.

B. Construct foundations for roadway and sign lighting system in accordance with Section 03 20 00 – Concrete Reinforcing and Section 03 30 00 – Cast-In-Place Concrete and as detailed on the Drawings.

C. Relocate roadway lighting system in accordance with HSS Subsection 622.03 – Construction.

D. When shown in the Design Plans or specified by the HRTP, remove and salvage the existing electrical equipment including bolts and nuts, luminaires, standards, mast arms, ballasts, transformers, service equipment, and pullboxes. Otherwise, the existing electrical equipment shall become the property of the Contractor and the Contractor shall remove and dispose of the existing electrical equipment in accordance with HSS Section 202 – Removal of Structures and Obstructions. Deliver City light standards to the Department of Facility Maintenance baseyard at Manana and State light standards to the DOT Highways Oahu District Baseyard as directed by the HRTP.

1. Underground conduits, conductors, and foundations not reused in the Work shall become the property of the Contractor. Remove them from the highway right-of-way in accordance with HSS Section 202 – Removal of Structures and Obstructions.

2. When abandoning a foundation in-place on outside the roadbed area, remove the top of the foundation, anchor bolts, and conduits to a depth of 6 inches below the surface of the ground. Backfill the resulting hole with material equivalent to the surrounding material.

3. When reinstalling salvaged electrical equipment, furnish and install the materials, equipment and incidentals necessary to complete the Work.

4. Clean and re-lamp the lighting fixtures that will be reinstalled.

5. When the existing materials and equipment that the Contractor plans to relocate is not according to the Contract, replace them with new material and equipment.

E. Remove and dispose of roadway and sign lighting systems in accordance with HSS Subsection 202.03 – Construction and Section 02 41 00 – Demolition.

F. Excavate and backfill for roadway and sign lighting system foundations in accordance with HSS Subsection 204.03 – Construction.

3.02 FALSEWORK LIGHTING

A. Furnish, install, maintain, and remove falsework lighting in accordance with HSS Subsection 633.03 – Construction.

END OF SECTION

SECTION 27 60 00

INTELLIGENT TRANSPORTATION SYSTEMS

PART 1 – GENERAL

1.01 SUMMARY

A. Description: This Section includes requirements for furnishing and installing fully functional and operational Intelligent Transportation Systems (ITS) devices including License Plate Recognition (LPR) system, portable Dynamic Message System (DMS) as well as other measures for traffic mitigation through the construction work zone. The Contractor is responsible for procurement, installation, testing, training and maintenance of ITS equipment along the project corridor and key parallel routes.

B. The Contractor provided items shall be new and shall utilize the most current technology. Provide subsystems that minimize the possibility that failure of any one component or module causes total subsystem failure. Failure of one component or module must not cause the failure of any other component or module. Provide device subsystems that proceed automatically to full-functional mode at the device location and at the Traffic Management Center (TMC)/DR Fortress or remote control location, without the need for any human intervention, when related electrical power supply is turned on or restored.

C. Comply with the following standards and codes as indicated and where applicable: NEMA, NEC, NTCIP, ASTM, IEC, and AASHTO.

D. Section Includes:

1. Traveler Information
2. Traffic Management
3. Incident Management

1.02 REFERENCES

A. State of Hawaii Department of Transportation Standard Specifications (HSS):

1. HSS Section 645 Work Zone Traffic Control

1.03 SUBMITTALS

A. General: Refer to Section 7.7 – Submittal Procedures, and Section 7.8 – Shop Drawings, Product Data, and Samples, for submittal requirements and procedures.

B. Submit traffic control plans and modifications and deviations to accepted traffic control plans in accordance with HSS Subsection 645.03 – Construction.

C. Provide documentation pertaining to each ITS device subsystem. At a minimum provide three hard copies and one electronic copy of the operations manuals for each device and all its subsystems to the HART representative. At a minimum, provide the following manuals: ITS device, including LPR camera and portable DMS. Submit an electronic and a hard copy of the wiring diagrams that display the connections between each of the subsystems. At a minimum, provide the following diagrams:

1. Communications Subsystem: All subsystems and components, including connections to modems, devices, third party service providers, and the TMC/DR Fortress.

2. TMC/DR Fortress: Including connections to and from the TMC/DR Fortress, ITS devices, network servers, and other related communications equipment. Include any new physical connections established within the TMC/DR Fortress, including to and from existing or new work stations. The Contractor shall coordinate with HART representative or their designee to integrate the travel time system within the DR Fortress. The Contractor will not be allowed to work on HDOT systems within DR Fortress.

3. Cabinet/interface box: Provide three copies of the wiring diagram for each cabinet/interface box assembly. Place a clear protective envelope in the cabinet/interface box that contains one copy of the manufacturer's instruction manual for each component contained in the enclosure.

1.04 QUALITY ASSURANCE

A. General: Refer to Section 7.10 – Quality Assurance, for quality assurance requirements and procedures.

PART 2 – PRODUCTS

2.01 MATERIALS

A. Portable Dynamic Message Signs (DMS):

1. Procure full matrix portable DMS. Panel dimensions shall be a maximum of 80" x 138" capable of displaying 3-lines of eight (8) 18" characters as well as graphical display. Signs shall be capable of storing a minimum of 100 pre-programmed messages and Contractor shall provide central control software capable of full command of all field portable DMS including capability for time of day, day of week pre-programmed message display. Portable DMS shall have wireless communication and be provided with solar power. The portable DMS communication protocol including supporting software shall comply with the versions of the NTCIP standards that are current at the date of Contract award. The Contractor shall secure the portable DMS against hacking using a firewall.

2. Maintain the portable DMS per manufacturer's recommendations and keep operational for duration of the Contract. It is the Contractors responsibility to maintain the portable DMS to provide 24/7/365 operational availability during the construction period. Submit cut sheets for portable DMS for HART approval.

3. Provide a trailer to mount portable DMS. Secure the trailer in place to minimize the theft of the portable DMS trailer while in place.

B. Solar Panels:

Solar panels for the portable DMS shall include a rigid framed photovoltaic solar array, batteries, charge / load controller, control panel, and a complete wiring kit for the solar array and battery bank.

1. Solar array panel sizes shall be minimized to reduce the wind load requirement on the trailer.

2. Solution shall be capable of delivering a minimum of 110 percent of the total equipment wattage (including battery re-charging), with batteries sufficient for providing 72 hours of autonomous power.

3. Batteries and controller shall be housed in an outdoor rated cabinet, with a minimum rating of NEMA 3R. Cabinets shall have separate compartments for the battery bank and control equipment.

4. General Features:

   a. Operating Temperature: -40 to 140 degrees Fahrenheit

   b. 12 VDC output voltage

5. Standard of Acceptance: Carmanah DuraGEN Solar Engines, or approved alternate.

C. License Plate Recognition Cameras:

1. The Contractor shall furnish and install license-plate recognition (LPR) technology compatible with the existing system for both temporary and permanent LPR camera sites. The existing HDOT system consists of the PIPS technology Spike+ Model P372 and associated components.

2. The LPR system will include the LPR camera with lens, LPR interface box along with the required LPR interface modules, five (5) port Ethernet switch and all the appurtenances required to make the LPR completely operational. In addition, the Contractor shall also procure and install field equipment including surge suppressor, wireless modem and antenna, terminal servers, Ethernet extender as required, related power supplies, and related cabling within the LPR interface box as indicated in the ITS Plans.

D. Communication Infrastructure:

1. Communication cabinets (LPR interface box in case of LPR system) shall be:

   a. Manufactured from 14 gauge Type 316 stainless steel

   b. Structure mountable

   c. NEMA 3R/4

   d. Hinged, pad-lockable doors

   e. Dimensions as noted on the drawings, or to suit all equipment

2. Communication / Power Conduits:

   a. Conduits used for ITS devices shall be PVC schedule 80 at locations installed under the ground and PVC coated Galvanized Rigid Steel (GRS) at locations installed above ground, unless otherwise noted in the drawings. The Contractor shall always use PVC coated GRS, where GRS is noted in the drawings.

b. Conduit sizes shall be designed to meet NEC conduit fill capacities

c. Pull boxes and junction boxes shall be installed as per the NEC

E. Power Distribution Subsystem:

1. Provide full power distribution subsystem to all electronic components within the cabinets/interface box and the related ITS device. Furnish power distribution panel as required to distribute power to all equipment within the enclosure and ITS devices served by the enclosure. Provide circuit breakers sized to meet or exceed the NEC requirements for the loads supported, with a minimum of 10 A trips. Size the circuit breaker based on the loads of the ITS device(s) utilizing the enclosure. Provide circuit breakers on an electrical panel in a NEMA 1 enclosure, or DIN rail mounted with appropriately rated junction blocks and buses. Provide a power distribution panel that is fed directly by the main circuit breaker at the electrical point of service, or solar installation or existing traffic/CCTV cabinet, where applicable. Provide connection to grounding system.

2. Provide a neutral bus of solid metallic strip rigidly mounted on the power panel which is isolated from enclosure ground. Provide all neutral conductors terminated on the neutral bus. Bond the control enclosure, the main disconnect, the power distribution panel, the service ground wire and the branch circuit ground wires to the ground bus. Bond the ground bus to the enclosure grounding system with Ground Wire.

3. Furnish all conduit, elbows and expansion fittings, wire, connections, wooden poles, service disconnects, and related equipment to establish electrical service at the ITS device location. Include all materials necessary to establish electrical connection between the device location, the device enclosure, and the electrical point of service.

F. Wiring and Cabling:

1. Provide layout to minimize the flexure of cabling. Where wire is required to flex often, use high strand wire. Provide wiring conforming to the following color code:

a. 120 VAC power wires 1 phase i.e. lights, heaters - Black hot and white neutral.

b. 120 VAC control wires – red

c. 120 VAC externally powered – yellow

d. 12/24 VDC – Blue

e. Ground – Green

G. Cat 6 Cable:

1. All the Ethernet cabling shall use Cat 6 cable. Provide shielded Cat 6 cable at locations, where the Ethernet cables are run along with electrical conductor cable. At aerial locations, install Cat 6 cable on messengers. Provide cat 6 cables at locations as shown in the Plans with the following requirements:

a. Cable shall be tinned bare copper conductor of stranded (braided) construction

b. Cable shall have four (4) pairs of solid 24 AWG conductor gauge

c. Cable shall contain an polyethylene (or equivalent material) insulation layer for use in outdoor installations
d. Cable's outer jacket shall be rated for heavy duty UV, sunlight, oil, and weather resistant outdoor installation (industrial grade PVC construction or equivalent)
e. Cable shall have a minimum insulation thickness of 0.010 in.
f. Shielded Cat 6 cable shall have 100% effective coverage (combination foil/polyester and braid shield or equivalent) to reduce EMI interference
g. Cat 6 cable shall have environment/temperature ratings of -40°C to +70°C (Operating)
h. Cat 6 cable shall have a maximum pulling tension of 25 lbs.
i. Cat 6 cable shall have a weight of less than 29 lbs. /kft
j. Cat 6 cable shall have an outside diameter of less than 0.260 in
k. Cat 6 cable shall be ROHS 2011/65/EU and ANSI/TIA-568 standards compliant

H. Wireless Modems:

1. The Contractor procured and installed wireless modem shall be fully compatible with the modems used on other segments of the project and with the ITS equipment being supported. Coordinate with the HART representative for the make and model of the wireless modem used on other segments of the project.

2. The modem shall have a minimum Received Signal Strength Indication (RSSI) of -90dBm. The units shall be environmentally hardened and interface with 10/100 Mbps Ethernet. The units shall provide a wide area wireless data access at speeds up to 7.2Mbps downlink and 2.0Mbps uplink.

3. The Modem units shall be equipped with an external antenna, compatible for use in the project area.

4. General Features:

a. Operating Temperature: -22 to 150 degrees Fahrenheit

b. Input Voltage: 9 – 28 VDC

c. Operating Power – 300 mAh

5. All necessary incidental components shall be supplied to accomplish a fully operational Modem and working data connection.

6. Standard of Acceptance: Sierra Wireless Raven X, Sierra Wireless GX, or approved equal.

7. The Contractor shall be responsible for prompt payment for all monthly service charges associated with the modems until the final acceptance of the system.

I. Surge Suppressor:

1. Provide transient voltage surge protector at the cabinet/LPR interface box for each external cable connection which is terminated at an outdoor device, or routed through outdoor area. The surge suppressor is to be rated IEEE C62.41 CLASS A. Install a 120 VAC, 3-wire, 20A inline surge protection device. The surge protection device will have an operating temperature of -04 to 85 degree C,

maximum surge current of 30,000 A and surge voltage of 10KVA, 138 volts for clamping voltage, power indicator, open circuit for fail safe operation, and protection shall be between line to neutral, line to ground, ground to neutral. The manufacturer shall have a lifetime warranty for its product. Warranty shall cover the cost for parts, labor, and/or replacement of the failed device. Submit product sheets for approval by HART representative.

J. Terminal Server:

1. Provide a terminal server compatible with the LPR interface box to connect the serial ports over Ethernet for access to network. At a minimum, the terminal server shall have:
   a. No. of ports: Minimum 2
   b. Data rate: 10/100 Mbps;
   c. Async Serial: 110 bps to 230 kbps
   d. Management: web server, serial console, Telnet
   e. Operations: Half- and full-duplex
   f. Protocols: RS-232, TCP, IP, ARP, DHCP, Telnet, HTTP, UDP, ICMP
   g. Autosensing
   h. Temperature rating – operating: 14 F to 176 F
   i. Interfaces: RS 232, RS422, RS485
   j. Indicators: LEDs: per unit: power, Link, Ready; per port: TX, RX
   k. Power: 8VAC – 24VAC or 9VDC – 48 VDC
   l. Size: 1.75” (H) x 7.1” (W) x 4.1” (D)
   m. Weight: 3 lbs
   n. Din rail mountable

K. Ethernet Extender:

1. Provide an Ethernet extender to extend the Ethernet range to more than 800 feet. At a minimum, the Ethernet extender shall have the following features:
   a. Distance (on Cat 6 cable): minimum 800 ft at 2 Mbps
   b. Ports: 1
   c. Connectors: RJ-11, RJ-45
   d. Operations: Half- and full-duplex
   e. Temperature rating – outdoor rated
   f. Power: 12 VAC
   g. Size: 2” (H) x 5.3” (W) x 4.3” (D)
   h. Weight: 2 lbs
   i. Din rail mountable

L. Head-End Equipment

1. Coordinate with the HART representative to determine the head-end equipment required to integrate the LPR sites into the existing LPR infrastructure. Procure, install, integrate, and test all the required equipment. Coordinate with HART to integrate into the existing head-end at the DR Fortress.

2. Coordinate with the HART representative to determine the head-end equipment required for portable DMS to receive travel time data from the central system. Procure, install, integrate, and test all the required equipment.

PART 3 – EXECUTION

3.01 TRAVELER INFORMATION

A. Procure and install LPR technology along the construction corridor and major parallel and "feeder" routes as depicted in the ITS Plans. Maintain the data collection devices per manufacturers' recommendations and ensure the data collection devices remain active and operational throughout the duration of this project (24/7/365). Should lanes be shifted to accommodate construction on one side of the highway, data collection devices shall be relocated or replaced. Submit plans for HART approval prior to commencing installation of the LPR camera systems.

B. Provide supplemental portable DMS as part of Contractor developed traffic management plans. Supplemental portable DMS beyond those depicted in the ITS plans will be operated solely by the Contractor per HART-approved traffic management plans.

C. Provide portable DMS as depicted in the Design Plans. Provide communication with portable DMS to allow for remote control of messages. Ensure that DMS are available on a continuous basis (24/7/365) during all periods of construction within the corridor.

D. Provide portable DMS that enable display of travel times from a central location. Procure and install the portable DMS server as required to integrate with the existing head-end systems to post the travel times.

E. Deploy the portable DMS (used exclusively for displaying travel time messages) as depicted in ITS Plans only after the travel times are qualified by HDOT and deemed acceptable for public dissemination.

F. Temporary License Plate Recognition (LPR) Camera Locations:

1. Procure, install, integrate, and test a completely functional temporary LPR camera system.

2. Locations requiring temporary LPR cameras are detailed on the ITS Site Plan drawing.

3. Quantities of cameras at each location shall be as indicated on the site plan.

4. Temporary LPR camera sites shall consist of all equipment to provide a system integrated LPR camera site, including, but not limited to, LPR cameras with lens; LPR interface box; communication infrastructure; power servicing infrastructure; support and civil-electrical works.

5. The Contractor shall procure and install any support structure (wood pole/foundation, guy wire etc) as depicted in the ITS Plans.

6. Power servicing for the cabinet shall be designed and provided by the Contractor as required.

7. Install temporary LPR cameras prior to any construction activity impacting existing traffic operations or within 60 days following Contractors notice-to-proceed, whichever occurs first.

8. Procure and install the necessary equipment at the head-end location as required to completely integrate the temporary LPR camera system with the existing LPR infrastructure.

G. Permanent License Plate Recognition (LPR) Camera Locations:

1. Procure, install, integrate, and test a completely functional permanent LPR camera system.

2. Locations requiring permanent LPR cameras are detailed on the ITS Site Plan drawing.

3. Quantities of cameras/cabinets at each location shall be as indicated on the site plan.

4. Install a complete system integrated LPR camera site, including, but not limited to, LPR cameras with lens; mounting hardware; LPR interface box; communication infrastructure; power servicing infrastructure; and civil-electrical works.

5. The Contractor shall procure and install any support structure (street light pole and foundation) as depicted in the ITS Plans.

6. Install permanent LPR cameras prior to any construction activity impacting existing traffic operations or within 60 days following Contractors notice-to-proceed, whichever occurs first.

7. Install the necessary equipment at the head-end location as required to completely integrate the permanent LPR camera system with the existing LPR infrastructure.

H. Accuracy of Travel Time System

1. Travel time system shall have the following performance requirements at a minimum:
   a. Travel time of system shall be within 10% of the ground truth value (measured by actual vehicle test runs) for during different time of the day (peak vs. non-peak, day vs. night) and day of the week.
   b. Travel time system shall be available at least 90% of the time (calculated from the submitted report the number of operational hours over the total number of hours)

3.02 TRAFFIC MANAGEMENT

A. If Contractor activity results in diversion of traffic, change in travel lanes or other conditions that require modification to existing signal timing plans, the Contractor shall coordinate with the traffic signal owner to modify existing signal timing plans.

B. Maintain the function of all existing CCTV cameras and their communication with the City Traffic Management Center. Should the Contract work result in disruption to the

operations of existing CCTV cameras, the Contractor shall be responsible for restoring the operations of the existing CCTV cameras within one (1) calendar day at no additional cost.

3.03 INCIDENT MANAGEMENT

A. The Contractor shall be responsible for removal of disabled vehicles from the construction work zone within 15 minutes of occurrence. Project dedicated tow truck at the job site is not required.

3.04 ITS DEVICE TESTING:

A. Test the functionality and operability of a complete ITS subsystem. Complete all testing for the following ITS devices: LPR system (both permanent and temporary), and portable DMS. Testing procedures described in this Section are intended to test each subsystem element to make certain that the elements are properly integrated to achieve a fully functioning subsystem. Contractor to provide a test plan and procedures for each test noted below for approval by HART 30-days prior to the start of testing. Make provisions for up to two personnel to attend all tests and demonstrations. Conduct the following tests, in the order indicated, on each ITS device and device subsystem:

1. On-Site Standalone Tests
2. System Tests
3. Operational/Maintenance Period
4. Warranty Period

B. The acceptance of each stage of testing does not imply that testing is complete at that stage. If problems are found at a later date or stage of testing, it may be necessary to return to an earlier stage of testing after repairs have been made to the system. If at a later stage of testing, a piece of equipment is replaced, repaired, or significantly modified, retest to the level necessary to isolate any problem and establish a course of action to remedy the situation.

C. Provide test documentation, including at a minimum, test procedures, checklist, test forms, and data summary sheets for each item. Provide accuracy requirements as part of test plan for approval by the HART representative. Tailor test documentation for each item being tested. Submit testing documentation before testing for the HART representative's acceptance. After test documentation is approved at least five (5) days before the start of the test, provide a test schedule for approval by the HART representative so the HART representative can observe each test.

D. Failure to conform to the indicated requirements of any test will result in the device being considered defective and equipment will be subject to rejection by the HART representative. In the event a defect is determined, identify whether it is limited to a specific unit or could be potential problems in all such units. Equipment rejected because of problems limited to the specific unit may be offered again for retest provided all issues of non-compliance have been corrected and re-tested, and evidence is submitted to the HART representative.

E. In the event that equipment malfunctions during the test period, the HART representative may declare a subsystem defect and require replacement of all equipment at no additional cost to the HART. When a subsystem defect is declared, restart the test for that specific

subsystem. Begin the test period when all similar equipment is replaced and retest has been successfully completed.

F. If a unit has been modified as a result of the equipment replacement, prepare a report and deliver it to the HART representative for acceptance. Describe in the report the nature of the failure and the corrective action taken. If a failure pattern, as defined by the HART representative, develops, the HART representative may direct that design and construction modifications be made to all similar units without additional cost to the HART. In the case of problems common to many units, modify all units without additional cost to the HART.

G. Test the equipment in accordance with approved test procedures only. Record test results on data summary sheets for each piece of equipment tested. Provide certification of test results by a qualified Representative. Submit all test records, including photocopied duplicates, as required, to the HART representative, within one day of the test.

H. Complete testing for each equipment unit in as few consecutive days as possible as determined by the HART representative. Schedule testing with additional time allotted for the HART representative to request that certain portions of a test be repeated. The HART representative has the right to witness and/or assign their designee to witness any test.

I. At a minimum, all testing procedures must be signed by the following: The HART representative, or their designee, and the Contractor's designee. The acceptance of test procedures and witness of such tests does not relieve the responsibility to provide a completely acceptable and operating subsystem that meets the indicated requirements.

J. Provide certification from the vendor that the ITS devices has passed the Factory Demonstration Testing.

K. On-Site Standalone Tests:

1. Conduct on-site standalone tests at each field location to verify that each individual field subsystems satisfy the indicated requirements. Conduct these tests before interconnection to the TMC/DR Fortress. Following the installation of equipment in the field, conduct field tests on each piece of equipment, at each installation site to verify that components, modules or subsystem of equipment operate properly in their intended application to the extent possible before connection to the TMC/DR Fortress and to other subsystems. Provide the required testing equipment, including a portable computer, and test software to perform local subsystem operations and diagnostic test procedures. Submit test procedures, checklist, and summary sheets for the HART representative's acceptance before performing tests. Provide HART representative with a testing schedule indicating the date, time, and location of each test. Provide at least 5 working days notice before all tests so the HART representative can observe each test. If a subsystem fails to meet the requirements specified, rectify the subsystem as required and repeat the tests until successful at no additional cost to the HART. If a subsystem component has been modified as a result of the test failure, prepare a detailed report on the modifications to subsystem or software and submit it to the HART representative. Describe in the report the nature of the failure and corrective action(s) taken.

L. System Tests:

1. Conduct entire LPR and portable DMS system tests from the TMC/DR Fortress and field locations, as required, to verify that the overall subsystem meets the

indicated requirements. Conduct system tests following completion and acceptance of all on-site standalone tests. Provide at least 10 working days notice before all tests so the HART representative can observe each test. Where central control software, hardware and network switches exist, utilize the existing equipment and control software to manage and control the ITS devices. Exercise all functions for the device subsystems to test control and monitoring functions of the devices remotely. Where new software, switching systems, or hardware are installed in the project, utilize this new equipment to test control and monitoring functions of the devices remotely. Demonstrate that the communications subsystem is fully functional. In the event of test failure, perform a partial or total re-test to demonstrate the subsystem is functioning as a whole. Conduct system tests on all subsystems and components that are being furnished under this contract. Conduct tests from the TMC/DR Fortress as indicated, exercising functional and interface requirements as required.

M. Operational/Maintenance Period:

1. Operate and maintain all the ITS devices (LPR, PDMS) throughout the duration of the Contract. Furnish a detailed operational support plan covering preventive and remedial maintenance of all equipment. Furnish all necessary labor, materials, equipment, tools, transportation, supplies, maintenance and protection of traffic, and incidental items. The plan must include qualifications of the personnel assigned by the Contractor for each activity included. The Contractor will own and maintain the travel time system (LPR cameras/PDMS) during this period. If any corrections or improvements are made in any of the provided software before the end of the operational period, provide this upgraded software at no additional cost to the HART. If any adjustments are made to wiring or equipment settings during the operational support period, reflect the adjustments in the documentation. Coordinate with the HART representative for all field activities. Except for emergency service or when responding to a malfunction repair, notify the HART 7 calendar days before scheduling any activities. Furnish maintenance and protection of traffic plans as required by the HART representative. Conduct preventative and remedial maintenance activities during the operational period.

2. Preventive Maintenance:

   a. Detail the activities to be included in a preventive maintenance program and the frequency of each activity. Complete all preventative maintenance activities for applicable devices. Preventive maintenance shall be conducted every six (6) months at a minimum and shall include all procedures that are recommended by the equipment manufacturers.

   b. Perform visual observation of all ITS device control subsystems in operation. Use internal diagnostics to verify proper operation. Repair any malfunctions found, and adjusting equipment settings as required. Perform visual inspection of every control enclosure for water entry and animal infestation. Repair equipment to a "like-new" condition. Repair any instances of water entry. Upon performing preventive maintenance on any piece of equipment, submit two forms to the HART indicating the date, equipment location, problems found, and work performed. Except for emergency service, notify the HART 7 calendar days before scheduling any activities.

3. Remedial Maintenance.

a. Monitor the equipment at least on a daily basis and provide a weekly performance report for the travel time system. HART/HDOT will oversee the performance and dictage any changes required to improve the performance of the system. When equipment malfunctions occur, notify the malfunction to HART representative and within 2 business days of a non-emergency request or within 4 hours of an emergency request, provide a repair technician at the equipment location working to fix the problem. Restore the malfunctioning equipment to a fully operational condition within 5 working days of notification. If the malfunction cannot be repaired within the time allotted, notify the HART immediately and provide a written explanation. The HART representative may extend the time limit on a case-by-case basis. Keep a neat and accurate log of failures reported and the corrective actions taken. Submit two copies of the logs to the HART every 2 months. The logs become the property of the HART at the end of the Construction Contract period.

N. Warranty Period:

1. Provide a manufacturer's warranty in HART's name for each ITS device, component, subsystem, hardware, software and piece of equipment furnished in the project. Provide manufacturer warrantees for durations equivalent to industry standards. Provide warrantees of a one year minimum duration. Provide a warranty that will enable the full replacement of a piece of equipment in the event of equipment failure, at no additional cost to the HART. The warranty period shall begin at the HART's acceptance of the ITS system following the system testing.

3.05 ITS DEVICE INTEGRATION:

A. Integrate LPR system and the portable DMS into the existing ITS system at the related TMC/DR Fortress or as indicated or directed by the HART representative. Provide all connectors, cables, software configuration and labor necessary to furnish a fully functional ITS device subsystem. This includes all work, coaxial cable, network cable, data connections and installation that allows for data transmission and control from the TMC/DR Fortress. Coordinate with the HART representative to obtain all relevant network information to configure the devices to successfully control them from the TMC/DR Fortress.

3.06 SPARE PARTS:

A. Refer to Section 7.35 Spare Parts for general spare part requirements. Provide 10% of all the components which may be expected to require regular replacement under normal maintenance schedules, such as mechanical parts subject to continuous operation. At a minimum provide spares for the following:

1. LPR cameras
2. LPR interface modules
3. Wireless modem
4. Power supplies
5. Terminal server

6. Surge suppressors
7. PDMS display modules

The Contractor shall store the spare parts at their local facility for usage, as needed until the final project acceptance. The Contractor shall transfer all the spare parts in working conditions to the HART following the final project acceptance.

3.07 ITS DEVICE TRAINING:

A. Refer to Section 7.36 for Demonstration and Training. Provide training prior to the final system testing/acceptance.

This page intentionally left blank.

SECTION 31 11 00
CLEARING AND GRUBBING

PART 1 – GENERAL

1.01 SUMMARY

A. Description:

1. Protecting trees designated to remain.
2. Clearing all surface objects including trees, logs, roots of downed trees, brush, residue of agricultural crops, grass, weeds, asphalt, concrete, masonry, and other unwanted material such as lumber, trash, and loose debris.
3. Grubbing areas below natural ground surface of vegetative and unwanted material interfering with proposed work.
4. Trimming tree branches that interfere with the finished facility or with construction operations.
5. Removing and disposing of material and debris from right-of-way, easements, road approaches, work and borrow pit sites, and other designated areas.

B. Section Includes:

1. Tree Protection
2. Clearing and Grubbing
3. Tree Branch Trimming
4. Demolition/Removal
5. Disposal of Removed Materials and Debris
6. Salvage
7. Backfill

C. Related Sections:

1. Section 02 41 00 – Demolition
2. Section 31 20 00 – Earth Moving
3. Section 31 13 19 – Tree Salvage and Storage

1.02 REFERENCES

A. Hawaii Administrative Rules (HAR):

1. HAR Title 11 — Chapter 26, Section 11-26-35: Rodents; demolishing of structure and clearing of site and vacant lots

B. State of Hawaii Department of Transportation Standard Specifications (HSS):

1. HSS Section 201 Clearing and Grubbing

1.03 SUBMITTALS

A. General: Refer to Section 7.7 – Submittal Procedures, and Section 7.8 – Shop Drawings, Product Data, and Samples, for submittal requirements and procedures.

B. Submit receipts documenting off-site disposal in accordance with the Contract.

1.04 QUALITY ASSURANCE

A. General: Refer to Section 7.10 – Quality Assurance, for quality assurance requirements and procedures.

1.05 REGULATORY REQUIREMENTS

A. Prior to site clearing or grubbing, comply with rodent control requirements of Hawaii Administrative Rules Title 11, Chapter 26, Section 11-26-35.

1.06 SITE CONDITIONS

A. Review with HART the location, limits, and methods to be used before clearing work.

B. Prior to clearing and grubbing, install temporary water pollution, dust, and erosion controls in accordance with General Conditions requirements.

C. Give written notices to utility companies and municipal departments requesting that they discontinue service to areas that will be affected by clearing and grubbing work.

D. Protect survey markers and monuments, existing improvements, and adjacent properties from removal and damage.

E. Clear and restore areas used for the Contractor's convenience. Restore these areas to their original condition and provide mulching, seeding, and planting as required.

1.07 CARE OF EXISTING VEGETATION

A. Protect all trees, lawns, and planted areas within right-of-way or easements that are designated for preservation by constructing suitable barriers or fences at or near the drip lines of the trees and plants, in accordance with HSS Section 201(D) – Clearing.

B. Feed, water, and maintain protected trees and plants in a healthy growing condition during the construction period.

PART 2 – PRODUCTS

2.01 MATERIALS

A. Furnish all materials, tools, equipment, facilities, and services required for performing tree protection, site clearing, grubbing, and other site preparation work.

PART 3 – EXECUTION

3.01 TREE PROTECTION

A. Preserve trees designated to remain and establish Tree Protection Zones within the established limits in accordance with HSS Subsection 201.03(D) – Clearing.

3.02 CLEARING AND GRUBBING

A. Perform clearing and grubbing in accordance with HSS Subsection 201.03 – Construction.

B. Unless otherwise indicated, clearing and grubbing shall include removing the top 4 inches of existing ground.

C. Do not start earthwork operations in areas where clearing and grubbing are not complete. However, stumps and large roots may be removed concurrently with excavation.

D. Where the Work includes requirements for wood chip mulch, acceptable material from clearing and grubbing activities may be used to produce such mulch.

3.03 TREE BRANCH TRIMMING

A. Remove tree branches overhanging trackways, roadways, and other designated areas of the site to within 20 feet of finished grade, utilizing an arborist certified by the International Society of Arboriculture, in accordance with HSS Subsection 201.03(D) – Clearing.

3.04 DEMOLITION/REMOVAL

A. Coordinate the work of this Section with the work of Section 02 41 00 – Demolition, as required to remove existing pavements, curbs, structures, and site improvements that interfere with new construction and where demolition is not indicated.

3.05 DISPOSAL OF REMOVED MATERIALS AND DEBRIS

A. Dispose of materials and debris in accordance with HSS Subsection 201.03(F) – Removal and Disposal of Material.

B. Removed materials and debris shall become the property of the Contractor and shall be disposed of in a legal manner. Location of disposal site and length of haul shall be the Contractor's responsibility.

C. Burying trash and debris on the site will not be permitted. Burning trash and debris at the site will not be permitted.

D. Trash and debris shall be removed from the site at frequent intervals so its presence will not delay the Work's progress or cause hazardous conditions for workers and the public.

3.06 SALVAGE

A. Refer to Section 02 41 00 – Demolition, for salvage requirements.

B. Transplant trees in accordance with Section 31 13 19 – Tree Salvage and Storage.

3.07 BACKFILL

A. Backfill trenches and excavations resulting from work under this Section, in accordance with Section 31 20 00 – Earth Moving.

END OF SECTION

SECTION 31 13 19

TREE SALVAGE AND STORAGE

PART 1 – GENERAL

1.01 SUMMARY

A. Description: Transplanting work complete, including but not limited to:

1. Pruning of trees to be transplanted
2. Rootball preparation and conditioning
3. Backfill of holes after tree removal from existing location
4. Replanting of trees in containers and delivering to project nursery

B. Section Includes:

1. Preparation
2. Pruning
3. Balling
4. Container Soil
5. Backfilling
6. Tree Guying
7. Maintenance
8. Final Inspection

C. Related Sections:

1. Section 32 90 00 – Planting

1.02 REFERENCES

A. Codes and Standards: Perform work in accordance with applicable laws, codes, and regulations required by authorities having jurisdiction over such work.

1.03 SUBMITTALS

A. General: Refer to Section 7.7 – Submittal Procedures, and Section 7.8 – Shop Drawings, Product Data, and Samples, for submittal requirements and procedures.

B. Construction Schedule: At the pre-construction meeting, provide a written projected transplanting schedule noting the estimated completion date, number of working days required, and special coordination requirements.

1.04 QUALITY ASSURANCE

A. General: Refer to Section 7.10 – Quality Assurance, for quality requirements and procedures.

B. Use equipment and methods in transplanting such as to prevent loss of essential feeding roots and injuries to bark, foliage, branches, and roots.

C. Employ a certified arborist to supervise and workmen experienced in transplanting.

D. Employ workmen experienced in pruning, balling, using procedures in accordance with standard horticultural practice and as directed by a certified/licensed arborist.

1.05 FEES AND PERMITS

A. Provide for fees, inspections, and permits required by federal, state, and local authorities in furnishing, transporting, and installing material.

1.06 JOB CONDITIONS

A. Protection: Protect trunk, branches, and root system of tree from drying action of sun and wind throughout the entire transplanting operation, (i.e., after being dug, while being transported, and while awaiting storage).

B. Clean Up: Keep areas of work clean, neat, and orderly at all times. Clean construction areas at the end of each day.

1.07 WARRANTY

A. Warranty: Trees shall be guaranteed to be in vigorous growing condition for 1 calendar year from the date of delivery to project nursery. If a tree fails to survive by the end of this period, and if proper maintenance has been exercised by HART, replace it with a healthy tree of the same species and size at no cost to HART.

PART 2 – MATERIALS

2.01 PLANTING SOIL MIX

A. For planting soil mix, conform to the requirements of Section 32 90 00 – Planting.

2.02 FERTILIZER

A. Use first-quality, standard-brand, agricultural products. Do not use fertilizer that would stain adjacent concrete surfaces.

1. Chemical Fertilizers: N-P-K as recommended by soil analysis, uniform in composition, free-flowing and suitable for application with approved equipment, delivered to the site in unopened containers, each fully labeled, conforming to the applicable fertilizer laws, and bearing the name or make of the manufacturer.

2. Plant Tablet: Agriform 21-gram tablet or approved equal.

3. Manure: Well rotted cattle manure, poultry manure, or approved equal.

2.03 ORGANIC SOIL CONDITIONER

A. Shredded mulch or other acceptable equal organic matters.

B. Redwood Shavings: Nitrogen stabilized and passing through a 1/2-inch screen.

2.04 WATER

A. Unless noted otherwise, potable water will be readily available at no additional expense.

2.05 MISCELLANEOUS MATERIALS

A. Tree Guys:

1. Anchors: Number 7 re-bars 36 inches minimum length.
2. Wires: Number 9 gage galvanized iron.
3. Hose Collars: Fabric-reinforced rubber hose, 1/2-inch diameter, flat black color.
4. Tubing: Polyethylene, grey, 1/2-inch diameter, when guying occurs in lawn areas.
5. Cable Clamps: Galvanized.
6. Turnbuckles: 6-inch, open turnbuckle, eye and fittings, 5/16-inch diameter. Four 1-1/4-inch take up, all galvanized, w055800 eldless, drop-forged steel.

B. Tree Stakes:

1. Stakes: 2 inches by 2 inches by 8 feet rough construction grade redwood, or eucalyptus with no paint or stain, or approved equal.
2. Ties: Fabric-reinforced, corded, rubber straps as manufactured by "Gro-Strait," Walnut Creek, CA, or approved equal, 3/8-inch x 3/4-inch length required by tree-staking details indicated on the drawings. Fasten to stake as noted on drawings.

C. Tree Containers: Plastic pots, wood boxes or wire baskets with plastic sheathing may be used at the direction of the certified/licensed arborist.

PART 3 – EXECUTION

3.01 PREPARATION

A. Do not move trees until new location has been properly identified to receive the trees.

B. Dig new planting holes at least 12 inches deeper and 12 inches wider than the rootball of the tree.

C. Loosen bottom of the hole with a pick or other means to a depth of 12 inches.

3.02 PRUNING

A. Remove approximately 1/3 of the branch structure of the trees in such a way to preserve the natural character of the trees.

B. Use clean, sharp tools, sanitized to prevent cross contamination.

C. Make smooth cuts smoothly with no tearing or ripping of the branches or fronds.

3.03 BALLING

A. The rootball for large trees shall be at least 4 feet larger than the trunk of the tree on each side at ground level.

B. Prune and cut roots that are bruised or broken during excavation.

C. Coat all cut sections of the exposed roots with standard acceptable hormone for stimulation of new root growth.

3.04 CONTAINER SOIL

A. Prepare container mix with one part manure to four parts of planting soil mix and a measure of fertilizer as specified by the manufacturer for the plant of the size being containerized.

B. Install 3 pounds of slow release MagAmp fertilizer and 5 pounds of approved soil conditioner at the bottom of the plant container.

C. Set plants plumb and up-right, within the container prior to backfilling all voids with container mix.

3.05 BACKFILLING

A. Prepare backfill mix with one part manure to four parts of planting soil and a measure of fertilizer as specified by the manufacturer for the plant of the size being transplanted.

B. Install 3 pounds of slow release MagAmp fertilizer and 5 pounds of approved soil conditioner at the bottom of the planting pit.

C. Set plants plumb and up-right, so that, when settled, the natural grade of the top of rootball is 2 inches above finished grade of other planting beds.

3.06 TREE GUYING

A. Guy wire to tree trunk or crown at an angle of about 60 degrees at about 2/5th the height of the tree and anchor to notched stakes or rods installed in the ground.

1. Neatly form hose and cable collars to prevent bare cables from chafing against the tree trunk or branches.

2. Drill pipe anchors to attach cables. Where appropriate connect cables to planter walls.

3. Use cable clamps for attachments.

4. Do not leave sharp cable ends protruding.

5. Install grey polyethylene marker tubing on guy wires when planting in lawn areas.

3.07 MAINTENANCE

A. Maintain all plants in optimum growing condition and appearance.

B. Begin 60-day maintenance period after the completion and HART's approval of transplanting.

C. Maintenance includes, but is not limited to:

1. Irrigate trees with adequate water sufficient to penetrate the soil to a minimum depth of 30 inches at a rate that will prevent saturation of the soil.

2. Fertilize as needed in accordance with the manufacturer's recommendation. Exercise proper caution and take measures necessary to avoid plant burn.

3. Remove damaged or diseased growth from the trees.

4. Treat disease and insect pest and provide protective spraying.

3.08 FINAL INSPECTION

A. At the completion of the 60-day maintenance period, hold the final inspection.

B. Request HART's inspection 5 working days prior to the completion of work, in order that a mutually agreeable time for inspection may be arranged.

C. If, after the final inspection, HART is of the opinion that the work has been performed in accordance with the drawings and these Specifications, written notice of acceptance will be given.

D. If the transplanted tree(s) is not in healthy or growing condition due to poor maintenance practice, replace the tree at no cost to HART. The 60-day maintenance period for the unaccepted work and related items shall be extended until the defects have been corrected and the work is accepted by HART.

END OF SECTION

This page intentionally left blank.

SECTION 31 20 00
EARTH MOVING

PART 1 – GENERAL

1.01 SUMMARY

A. Description:

1. Excavating, hauling, and disposing of surplus excavated material and placing and compacting specified materials for roadway, trackway, and pavement construction and site grading.
2. Preparing embankment and subgrade.
3. Excavating for drainage ditch and water channel.
4. Excavating and backfilling material for bridge, retaining structures, buildings and other structures.
5. Excavating and backfilling material for subsurface and surface drainage facilities.
6. Excavating and backfilling material for miscellaneous facilities including foundations of roadway and sign lighting standards, traffic signal standards, trenches for utility pipes and conduits, and water and sewer manholes and appurtenances.
7. Furnishing and placing controlled low-strength material as self-compacted backfill material in utility trenches and other works, in lieu of compacted fill.

B. Section Includes:

1. Examination
2. Staking and Grades
3. Existing Utilities
4. Hazardous Materials
5. Excavation and Embankment
6. Ditch and Channel Excavation
7. Excavation and Backfill for Bridges, Retaining Structures, Buildings and Other Structures
8. Excavation and Backfill for Surface and Subsurface Drainage Facilities
9. Excavation and Backfill for Miscellaneous Facilities
10. Controlled Low-Strength Material for Utilities and Structures
11. General

C. Related Sections:

1. Section 02 26 00 – Hazardous Material Assessment
2. Section 02 61 01 – Removal and Disposal of Contaminated Materials
3. Section 02 84 33 – Removal and Disposal of Polychlorinate Biphenyls
4. Section 31 11 00 – Clearing and Grubbing

1.02 REFERENCES

A. American Association of State Highway and Transportation Officials (AASHTO):

1. AASHTO T 176 — Standard Method of Test for Plastic Fines in Graded Aggregates and Soils by Use of the Sand Equivalent Test

B. ASTM International (ASTM):

1. ASTM C131 — Standard Test Method for Resistance to Degradation of Small-Size Coarse Aggregate by Abrasion and Impact in the Los Angeles Machine
2. ASTM C136 — Standard Test Method for Sieve Analysis of Fine and Coarse Aggregates
3. ASTM C535 — Standard Test Method for Resistance to Degradation of Large-Size Coarse Aggregate by Abrasion and Impact in the Los Angeles Machine
4. ASTM D422 — Standard Test Method for Particle-Size Analysis of Soils
5. ASTM D653 — Standard Terminology Relating to Soil, Rock, and Contained Fluids
6. ASTM D1140 — Standard Test Methods for Amount of Material in Soils Finer than No. 200 (75-um) Sieve
7. ASTM D1557 — Standard Test Methods for Laboratory Compaction Characteristics of Soil Using Modified Effort [56,000 ft-lbf/ft^3 (2,700 kN-m/m^3)]
8. ASTM D2216 — Standard Test Methods for Laboratory Determination of Water (Moisture) Content of Soil and Rock by Mass
9. ASTM D2487 — Standard Practice for Classification of Soils for Engineering Purposes (Unified Soil Classification System)
10. ASTM D2974 — Standard Test Methods for Moisture, Ash, and Organic Matter of Peat and Other Organic Soils
11. ASTM D4253 — Standard Test Methods for Maximum Index Density and Unit Weight of Soils Using a Vibratory Table
12. ASTM D4254 — Standard Test Methods for Minimum Index Density and Unit Weight of Soils and Calculation of Relative Density

13. ASTM D4318 Standard Test Methods for Liquid Limit, Plastic Limit, and Plasticity Index of Soils

C. State of Hawaii Department of Transportation Standard Specifications (HSS):

1. City and County of Honolulu/Federal Projects Special Provision to Section 102, Subsection 102.05, June 9, 2006
2. HSS Section 105 Control of Work
3. HSS Section 106 Material Restrictions and Requirements
4. City and County of Honolulu/Federal Projects Special Provision to Section 106A, June 14, 2004 – Sampling/Testing Guide for Acceptance and Verification
5. HSS Section 203 Excavation and Embankment
6. HSS Section 204 Excavation and Backfill for Miscellaneous Facilities
7. HSS Section 205 Excavation and Backfill for Bridge and Retaining Structures
8. HSS Section 206 Excavation and Backfill for Drainage Facilities
9. HSS Section 207 Ditch and Channel Excavation
10. HSS Section 314 Controlled Low-Strength Material (CLSM) for Utilities and Structures
11. HSS Section 616 Irrigation System
12. HSS Section 717 Cullet and Cullet-Made Materials
13. City and County of Honolulu/Federal Projects Special Provision to Section 203, Subsection 203(C)(2)(a) – Maximum Dry Unit Weight, April 21, 2006
14. City and County of Honolulu/Federal Projects Special Provision to Section 717, March 30, 2006

1.03 DEFINITIONS

Earthwork Terminology used in this Section and not defined herein shall be interpreted in accordance with the definitions given in ASTM D653.

A. Backfill: Soil or soil-rock material used to backfill excavations and to backfill excavated spaces around foundation walls, building walls, retaining walls, head walls, and abutments.

B. Borrow: Acceptable soil or soil-rock material used for fill, backfill, embankment, or other construction that is excavated from an off-site location and hauled in.

C. Embankment: Soil or soil-rock material for embankment construction. Embankment construction includes constructing embankments and dikes, including preparation of the areas upon which they are to be placed and, as required, construction of temporary surcharge or preload embankment above the grading plane.

D. Fill: Soil or soil-rock material placed to raise the subgrade or natural grade of the site.

E. Optimum Moisture Content: The water content at which a soil can be compacted to a maximum dry unit weight by a given compactive effort.

F. Relative Compaction: The ratio, expressed as a percentage, of the in-place dry density of material as compacted in the field to the maximum dry density of the same material as determined by laboratory compaction test ASTM D1557 in accordance with City and County of Honolulu/Federal Projects Special Provision to Section 203, Subsection 203(C)(2)(a) – Maximum Dry Unit Weight.

G. Relative Density: Mass per unit volume as specified in ASTM D4253 and ASTM D4254, as applicable to the soil and test method employed.

H. Soil Classification: Soil classification is based on the Unified Soil Classification system given in ASTM D2487. Group symbols, when used; conform to the symbols of ASTM D2487.

I. Subexcavation: Excavation beyond design grades wherein finished grade results in subgrade or slope face of Unsuitable Material.

J. Unsuitable Material: Excavated material or material below the natural ground surface in embankment areas or below sub grade elevation in excavated areas, which is unsuitable for its planned use, e.g. foundation support or base for additional fill placement, whether due to excessive moisture or containing deleterious materials such as organic matter, muck, humus, peat, sticks, debris, chemicals, toxic matter.

1.04 SUBMITTALS

A. General: Refer to Section 7.7 – Submittal Procedures, and Section 7.8 – Shop Drawings, Product Data, and Samples, for submittal requirements and procedures.

B. Procedure(s): Submit an outline, including method statement and schematics, of the intended excavation and backfill procedures. This submittal is for HART's general information and in no way relieves the Contractor of complete responsibility for the Work.

C. Quality Plan: Refer to General Conditions for quality assurance and quality control (QA/QC) general requirements. The Quality Plan shall include a schedule of all tests specified to be performed by the Contractor and QC testing

D. QC Testing: Submit pertinent information on the third-party testing designee(s) and scope of the testing to be performed by each. In addition, provide appropriate laboratory certifications, field equipment/personnel certifications, and resumes, including engineering licenses, for responsible individuals.

E. Submit certified test data for borrow excavated material in accordance with HSS Subsection 203.03(B)(2) – Borrow Excavated Material.

F. Submit manufacturer's certification of controlled low-strength material and unconfined 28-day compressive strength test data in accordance with HSS Subsection 314.03(B) – Acceptance.

G. Stormwater Management: Submit drawings and method statement for control and disposal of surface water, including stormwater runoff and construction water from the Work, in accordance with permit requirements.

H. Permits: Submit copies of all required permits.

I. Test Reports: Submit certified test reports of all tests specified to be performed by the Contractor. Test reports shall be sealed and signed by a Hawaii-registered Professional Engineer specializing in geotechnical engineering and materials testing.

J. Samples: Furnish and deliver representative samples of each fill and backfill material proposed as may be requested by HART for testing and analysis.

K. Delivery Tickets: Submit a delivery ticket with each load of imported borrow material delivered to the site, stating the type of fill material, the quantity, and the source.

L. Shop Drawings: Submit shop drawings and schematics as required to show coordination and sequencing of works, and to convey interdependencies of the related work items.

1.05 QUALITY ASSURANCE

A. General: Refer to Section 7.10 – Quality Assurance, for quality requirements and procedures.

B. Quality Plan: Quality Plan shall cover all earthwork operations and the field QC to be performed by the Contractor.

C. Quality Control:

1. The Contractor shall provide proper QC measures to ensure compliance with specified requirements.

2. Foundation and subgrade preparation and the placement and compaction of fills shall be performed under the supervision of a Hawaii-registered Professional Engineer.

D. Certificates of Compliance:

1. A certificate of compliance shall not relieve the Contractor of responsibility for incorporating material into the Work, which is in accordance with the drawings and these Specifications.

2. Certificates of compliance shall contain the following information:
   a. Name of supplier
   b. Type of material being supplied and available quantity
   c. A statement that the material complies with these Specifications
   d. Copies of test results from a qualified testing laboratory

E. QC Testing:

1. QC testing shall be performed by an independent, third-party laboratory certified or accredited by AASHTO or the Hawaii Department of Transportation.

2. QC testing shall be performed under the supervision of a Hawaii-registered Professional Engineer.

3. QC reports and test results shall be signed and sealed by the responsible Professional Engineer.

F. Tolerances:

1. Except as otherwise noted, construct finished surfaces to plus or minus 1/2 inch of the elevations indicated.

2. Tolerances for finished subgrade preparation shall be in accordance with HSS Subsection 203.03(D)(3).

3. In accordance with HSS Subsection 203.03(C), complete embankment slopes to plus or minus 3 inches of the slope line indicated. Do not encroach on the trackway bed or roadbed.

4. Maintain the moisture content of fill material as it is being placed within the recommended tolerances for moisture content of the material, or plus or minus 2 percent of optimum if not explicitly noted.

1.06 SITE CONDITIONS

A. Adhere to HSS Subsection 102.05 – Examination of Contract and Site Work.

B. Unfavorable Weather Conditions:

1. Excavating, filling, backfilling, and grading work shall not be performed during weather conditions that might damage or be detrimental to the condition of existing ground, in-progress work, or completed work. When the Work is interrupted by rain, excavating, filling, backfilling, and grading, work shall not resume until the site and soil condition (moisture content) are suitable for compaction.

2. Subgrade shall be free from mud, standing water, and deleterious material when work is resumed.

3. Soil material that is too wet for compaction shall be left to drain, to be aerated and dried by disking and harrowing or other approved methods, until the moisture content of the area is uniform and within the specified limits.

C. Prevention of Erosion: Comply with the requirements specified in General Conditions for temporary controls, and with the following:

1. Prevent erosion of stockpiles; ditches; embankments; and filled, backfilled, and graded areas until permanent drainage and erosion control measures have been installed.

2. Perform protective grading to provide positive drainage and to minimize ponding of surface water.

PART 2 – PRODUCTS

2.01 MATERIALS

A. Embankment Material: Conform to HSS Subsection 203.02 – Materials.

B. Borrow Excavated Material: Conform to HSS Subsection 203.02 – Materials.

C. Backfill for Bridges, Retaining Structure, Buildings and Other Structures: Conform to HSS Subsection 205.02 – Materials, HSS Section 717 – Cullet and Cullet-Made Materials,

and to HSS City and County of Honolulu/Federal Projects Special Provision to Section 717 (March 30, 2006).

D. Backfill for Drainage Facilities: Conform to HSS Subsection 206.02 – Materials, HSS Section 717 – Cullet and Cullet-Made Materials, and to HSS City and County of Honolulu/Federal Projects Special Provision to Section 717 (March 30, 2006).

E. Backfill for Miscellaneous Facilities: Conform to HSS Subsection 204.02 – Materials, HSS Section 717 – Cullet and Cullet-Made Materials, and to HSS City and County of Honolulu/Federal Projects Special Provision to Section 717 (March 30, 2006).

F. Controlled Low-Strength Material for Utilities and Structures: Conform to HSS Subsection 314.02 – Materials.

2.02 SOURCE QUALITY CONTROL

A. Fill, backfill, and embankment materials proposed to be used in the Work shall be tested in the laboratory for compliance with specified requirements as follows:

1. Moisture-Density Relationship: ASTM D1557
2. Moisture Content: ASTM D2216
3. Liquid Limit: ASTM D4318
4. Plastic Limit and Plasticity Index: ASTM D4318
5. Percentage of Wear: ASTM C131 or C535, as applicable
6. Sieve Analysis: ASTM D422 and ASTM C136, as applicable
7. Percent Passing No. 200 Sieve: ASTM D1140
8. Sand Equivalent: AASHTO T 176
9. Organic Content of Soils: ASTM D2974

B. Where classification of soils is necessary to meet specified requirements, perform laboratory tests in accordance with ASTM D2487.

C. Submit certified test reports of all tests as specified by Article 1.05 herein.

PART 3 – EXECUTION

3.01 EXAMINATION

A. Examination of site conditions shall be in accordance with HSS City and County of Honolulu/Federal Projects Special Provision Section 102, Subsection 102.05 – Examination of Contract and Site of Work, June 9, 2005.

3.02 STAKING AND GRADES

A. Lay out the Work and establish all necessary markers, benchmarks, grading stakes, and other stakes as required, in accordance with HSS Subsection 105.10 – Construction Stakes, Lines and Grades.

B. The laying out of base lines, establishment of grades and staking out entire work shall be done by a surveyor licensed in the State of Hawaii at the expense of the Contractor and he shall be solely responsible for their accuracy.

C. Should discrepancies be discovered in dimensions given in the Design Plans, immediately notify HART and responsible design Engineer before proceeding with work. Continuation of the work without resolution shall be Contractors sole responsibility and risk, including responsibility for costs involved in correction of construction placed due to such discrepancies.

D. Install instrumentation at locations and elevations in accordance with Section 31 09 00 – Geotechnical Instrumentation and Monitoring of Earthwork, and approved shop drawings.

3.03 EXISTING UTILITIES

A. Verify on site the location and depth (elevation) of all existing utilities and services before performing excavation work. Excavation within 3 feet of an active utility line shall be performed by hand.

B. Abandoned sewers, piping, and other utilities encountered in the progress of the excavating shall unless otherwise required be removed and the ends shall be plugged.

C. Active utility lines encountered that are not indicated in the Contract Documents shall be reported immediately to HART and respective utility owner. HART and utility owners shall be permitted free access to determine the measures deemed necessary to repair, relocate, protect in place, or remove the utility.

3.04 HAZARDOUS MATERIALS

A. Where contamination is known or suspected, conduct field screening for hazardous materials in accordance with Section 02 26 00 – Hazardous Materials Assessment. When applicable, remove and dispose of hazardous materials in accordance with Section 02 61 01 – Removal and Disposal of Contaminated Materials, and Section 02 84 33 – Removal and Disposal of Polychlorinate Biphenyls.

3.05 EXCAVATION AND EMBANKMENT

A. Clear and grub in accordance with Section 31 11 00 – Clearing and Grubbing.

B. Excavate in accordance with HSS Subsection 203.03(A) – Excavation.

C. Excavate borrow material and place selected material in accordance with HSS Subsection 203.03(B) – Excavated Material.

D. Place and compact materials specified necessary for roadway, trackway and pavement construction and site grading in accordance with HSS Subsection 203.03(C) – Embankment Construction and with HSS City and County of Honolulu/Federal Projects Special Provision to Section 203 (April 21, 2006).

E. Prepare subgrade to required density, cross-section, and grade in accordance with HSS Subsection 203.03(D) – Subgrade Preparation.

3.06 DITCH AND CHANNEL EXCAVATION

A. Clear and grub in accordance with Section 31 11 00 – Clearing and Grubbing.

B. Excavate for ditch and channel in accordance with HSS Subsection 207.03 – Construction.

3.07 EXCAVATION AND BACKFILL FOR BRIDGES, RETAINING STRUCTURES, BUILDINGS AND OTHER STRUCTURES

A. Clear and grub in accordance with Section 31 11 00 – Clearing and Grubbing.

B. Perform structure excavation in accordance with HSS Subsection 205.03(A) – Structure Excavation.

C. Place structure backfill in accordance with HSS Subsection 205.03(B) – Structure Backfill.

D. Place filter material in accordance with HSS Subsection 205.03(C) – Filter Material.

3.08 EXCAVATION AND BACKFILL FOR SURFACE AND SUBSURFACE DRAINAGE FACILITIES

A. As necessary, clear and grub in accordance with Section 31 11 00 – Clearing and Grubbing.

B. Perform excavation for drainage facilities in accordance with HSS Subsection 206.03(A) – Structure and Trench Excavation.

C. Place structure and trench backfill for drainage facilities in accordance with HSS Subsection 206.03(B) – Structure and Trench Backfill.

3.09 EXCAVATION AND BACKFILL FOR MISCELLANEOUS FACILITIES

A. As necessary, clear and grub in accordance with Section 31 11 00 – Clearing and Grubbing.

B. Perform excavation for miscellaneous facilities including foundations of roadway and sign lighting standards, traffic signals standards, trenches for utilities pipes and conduits, and water and sewer manholes and appurtenances in accordance with HSS Subsection 204.03(A) – Structure and Trench Excavation.

C. Place structure and trench backfill for miscellaneous facilities including foundations of roadway and sign lighting standards, traffic signals standards, trenches for utility pipes and conduits, and water and sewer manholes and appurtenances in accordance with HSS Subsection 204.03(B) – Structure and Trench Backfill.

3.10 CONTROLLED LOW-STRENGTH MATERIAL FOR UTILITIES AND STRUCTURES

A. Place controlled low-strength material for utilities and structures in accordance with HSS Subsection 314.03(A) – Placement.

3.11 GENERAL

A. Source of Supply and Quality Requirements: Reference HSS Subsection 106.01.

B. Material Sources: Reference HSS Subsection 106.02

C. Unauthorized Excavation: Reference HSS Subsection 106.03

D. Material Sample: Reference HSS Subsection 106.04

E. Sample Submittals: Reference HSS Subsection 106.05

F. Notice of Change: Revise HSS Subsection 106.06 such that unless otherwise provided for in writing by HART, Contractor is required to repeat the submittal process.

G. Certificate of Compliance: Reference HSS Subsection 106.07

H. Non-Conforming Materials: Reference HSS Subsection 106.08

I. State-Furnished Materials: Disregard HSS Subsection 106.09 with respect this Specification Section specific to earthworks.

J. Payment for Deleted Materials: Reference HSS Subsection 106.10

K. Non-earthwork material: Reference HSS Subsection 106.11 – Steel and Iron Construction Material, as these may apply to earthwork related work.

L. Assignment of Claims: Reference HSS Subsection 106.12 – Assignment Of Antitrust Claims for Overcharges For Goods and Materials Purchased.

M. Substitutions: Reference HSS Subsection 106.13 – Substitution of Materials and Equipment After Bid Opening.

N. Testing frequency minimum requirements shall be in accordance with City and County of Honolulu/Federal Projects Special Provision to Subsection 106A – Sampling/Testing Guide for Acceptance and Verification:

1. Cut Subgrade: Item 9 therein, page 6
2. Embankment Fills and Import Borrow: Item 10 therein, page 6
3. Structural Backfill: Item 11 therein, page 6
4. Trench Backfill: Item 12 therein, page 6
5. Aggregate Base Course: Item 13 therein, page 7
6. Subballast: See Aggregate Base Course
7. Ballast: See Aggregate Base Course excepting that relative compaction testing will not be required
8. Aggregate Subbase: Item 14 therein, page 7
9. Untreated Permeable Base: Item 15, page 7
10. Paving Fabric: Item 16.B, page 8
11. Permeable Separator: Item 17.B, page
12. Crushed Rock: Item 17.C, page 8

END OF SECTION

This page intentionally left blank.

SECTION 31 23 00

STRUCTURE EXCAVATION AND BACKFILLING

PART 1 – GENERAL

1.01 SUMMARY

A. Description: This Section includes excavation, subgrade preparation, backfilling, and compacting specified materials for buildings. Provide the backfill material.

B. Section Includes:

1. General
2. Examination
3. Staking and Grading
4. Structural Excavation
5. Structural Fill
6. Base Course under Concrete Walkway Slabs and Hardscape Paving
7. Controlled Low-Strength Material for Utilities and Structures

C. Related Sections:

1. Section 02 26 00 – Hazardous Material Assessment
2. Section 02 61 01 – Removal and Disposal of Contaminated Materials
3. Section 02 84 33 – Removal and Disposal of Polychlorinate Biphenyls
4. Section 31 20 00 – Earth Moving
5. Section 31 50 00 – Excavation Support and Protection

1.02 REFERENCES

A. ASTM International (ASTM):

1.	ASTM C33	Standard Specifications for Concrete Aggregate
2.	ASTM D1557	Standard Test Methods for Laboratory Compaction Characteristics of Soil Using Modified Effort
3.	ASTM E154	Standard Test Methods for Water Vapor Retarders Used in Contact with Earth Under Concrete Slabs, on Walls, or as Ground Cover
4.	ASTM E96	Standard Test Methods for Water Vapor Transmission of Materials
5.	ASTM E1745	Standard Specification for Water Vapor Retarders Used in Contact with Soil or Granular Fill Under Concrete Slab

B. State of Hawaii Department of Transportation Standard Specifications (HSS):

1. HSS Section 203 Excavation and Embankment
2. HSS Section 205 Excavation and Backfill for Bridge and Retaining Structures
3. HSS Section 314 Controlled Low-Strength Material (CLSM) for Utilities and Structures
4. HSS Section 703 Aggregates

1.03 SUBMITTALS

A. General: Refer to Section 7.7 – Submittal Procedures, and Section 7.8 – Shop Drawings, Product Data, and Samples, for submittal requirements and procedures.

B. Submit certified test data for borrow excavated material in accordance with HSS Subsection 203.03(B) (2) – Borrow Excavated Material.

C. Submit manufacturer's certification of controlled low-strength material and unconfined 28-day compressive strength test data in accordance with HSS Subsection 314.03(B) – Acceptance.

1.04 QUALITY ASSURANCE

A. General: Refer to Section 7.10 – Quality Assurance, for quality assurance requirements and procedures.

B. Adhere to the quality assurance requirements in Section 31 20 00 – Earth Moving.

1.05 FIELD AND SITE CONDITIONS

A. Reference HSS Subsection 102.05 – Examination of Contract and Site of Work.

B. Existing Site Conditions:

1. Contract Documents, including Geotechnical Baseline Report (GBR) (if included in Contract Documents for this Contract).
2. Subsurface Investigations: Geotechnical Data Report (GDR), or geotechnical report provided by HART for this Contract.

C. Soil or rock samples available for the Contractor's inspection.

1.06 PROTECTIVE MEASURES

A. All excavation shall be protected and guarded against danger to life, limb, and property.

B. Shoring, as required to safely preserve the excavations and earth banks, free from damages resulting from the work, shall be provided and installed by the Contractor.

C. All excavations shall be kept free from standing water. Do all pumping and draining that may be necessary to remove water to the extent required in carrying on the work. Grading shall be controlled so that ground surface is properly sloped to prevent water runoff into structural foundation, open trenching excavations, and adjacent buildings.

D. Conduct operations with minimum interference to streets, driveways, sidewalks, and passageways.

E. Provide and erect barriers as required by the Occupation Safety and Health Administration and as necessary to provide for the safety of the workers and the public.

PART 2 – PRODUCTS

2.01 MATERIALS

A. Structural Fill: Structural fill shall be either on-site soils generated from the cut areas (3 inches maximum particle size), free of organics, debris and other deleterious material, or select borrow for subbase course, conforming to HSS Subsection 205.02 – Materials, and HSS Section 703.20 – Structural Backfill Material.

B. Select Granular Fill: Select granular fill, where occurs, shall be well graded, non-expansive granular material with a maximum particle size of 3 inches and between 10 and 30 percent of material by weight passing the No. 200 sieve. In addition, the plasticity index shall not be greater than 10, the California Bearing Ratio (CBR) value shall be 20 or greater, and the CBR expansion potential shall not exceed 1.0 percent.

C. Aggregate Subbase Course: Subbase course under concrete slabs-on-grade, where indicated on the Design Plans or required by these Specifications, shall conform to HSS Subsection 703.17 - Aggregate for Subbase.

D. Cushion Fill: Cushion fill under concrete slabs-on-grade, where indicated on the Design Plans, shall be clean open-graded gravel, such as #3 Fine (ASTM C33, No. 67 gradation).

E. Controlled Low-Strength Material for Utilities and Structures: Conform to HSS Subsection 314.02 – Materials.

F. Vapor Barrier: ASTM E1745, Class A except as modified in Article 2.01F herein, or polyester-cord-reinforced three-ply high-density polyethylene sheet or one-ply extruded polyolefin sheet; 15 mil minimum thickness.

1. Permeance Rating: ASTM E96, ASTM E154 not exceeding 0.03 gr/ft^2/hr.

2. Compliance to ASTM standards shall be confirmed by an independent testing agency.

PART 3 – EXECUTION

3.01 GENERAL

A. Existing Utilities: In accordance with the requirements of Section 31 20 00 – Earth Moving.

B. Hazardous materials: In accordance with the requirements of Section 02 26 00 – Hazardous Material Assessment, Section 02 61 01 – Removal and Disposal of Contaminated Materials, Section 02 84 33 – Removal and Disposal of Polychlorinate Biphenyls, and Section 31 20 00 – Earth Moving.

C. Excavation and Embankment: In accordance with the requirements of Section 31 20 00 – Earth Moving, and for additional requirements as indicated in Article 3.04 herein.

3.02 EXAMINATION

A. Adhere to the examination requirements in Section 31 20 00 – Earth Moving

3.03 STAKING AND GRADES

A. Adhere to the staking and grades requirements in Section 31 20 00 – Earth Moving

3.04 STRUCTURAL EXCAVATION

A. Adhere to the structural excavation requirements in Section 31 20 00 – Earth Moving and Section 31 50 00 – Excavation Support and Protection, as applicable.

B. All structure footing bottoms shall be founded at least 24 inches below the lowest adjacent finish grade.

C. Subgrade preparation:

1. Prior to placing reinforcement, the soil at the bottom of the footing excavation shall be compacted to a minimum of 95 percent relative compaction in accordance with ASTM D1557.

2. Responsible geotechnical engineer shall be notified to evaluate the conditions encountered at the bottom of footing elevation.

3. If soft or loose soils are encountered at the bottom of footing elevation, such soils shall be removed by over-excavating to firm and/or dense soils. The resulting over-excavation shall be backfilled with select granular fill compacted to at least 95 percent relative compaction in accordance with ASTM D1557.

4. Excavations for footings shall have level beds, with stepped levels as shown on the Design Plans.

D. Should existing utility lines, other than those shown on the Design Plans be encountered during excavation, do not disconnect same without authorization by HART, but shall inform HART immediately of each discovery and work shall be done in accordance with instructions from HART.

3.05 STRUCTURAL FILL

A. Place and compact structure backfill in accordance with HSS Subsection 205.03(B) – Structure Backfill.

B. Place filter material at abutments and, except as otherwise noted, retaining walls in accordance with HSS Subsection 205.0(C) – Filter Material.

C. Structural fill shall be that fill material required to fill the natural soil to bottom of subbase course and to fill behind retaining walls.

D. All structural fill and backfill behind abutments and retaining walls shall be placed in accordance with HSS Subsection 205.03(B) – Structure Backfill. Establish moisture conditioning by placing in horizontal lifts not more than 8 inches in loose thickness, and compacted to at least 90 percent relative compaction as determined by ASTM D1557.

E. Special care is required when compacting within five feet of walls. Thinner lifts and hand operated equipment to preclude overstressing of the walls against which backfill is being place.

F. Structural fill shall be placed to elevation of bottom of the subbase course, tested, and approved by the Contractor's geotechnical engineer.

G. Fills placed on slopes having grades steeper than 5:1 (horizontal to vertical) shall be keyed and benched into the existing hillside as the fill is brought up in lifts.

H. Building slabs-on-grade that will be subject to machinery vibration, vehicular and/or forklift traffic, and high-rack storage leg loads, shall be underlain by at least 6 inches of aggregate subbase course compacted to a minimum of 95 percent relative compaction.

Interior building slabs-on-grade (not subject to machinery vibration, vehicular and/or forklift traffic, and high-rack storage leg loads) may be underlain by at least 4 inches of cushion fill in lieu of 6 inches of aggregate subbase course.

Where moisture infiltration through the slab must be mitigated to prevent damage to floor coverings, a vapor barrier shall be placed on top of the gravel cushion layer or aggregate base course.

I. When unbalanced placement of backfill against a wall will create bending and shear stresses in the wall, the placement shall not begin until either:

1. The concrete or the grouted masonry has reached at least 90 percent of its specified compressive strength and the wall's permanent supporting members have been constructed; or

2. The wall has reached at least 75 percent of its specified compressive strength and adequate temporary bracing has been installed.

3.06 BASE COURSE UNDER CONCRETE WALKWAY SLABS AND HARDSCAPE PAVING

A. Unless otherwise noted, exterior concrete walkways and hardscape paving shall be underlain by a 6-inch layer of select granular fill or aggregate subbase course compacted to at least 90 percent relative compaction in accordance with ASTM D1557.

3.07 CONTROLLED LOW-STRENGTH MATERIAL FOR UTILITIES AND STRUCTURES

A. Place controlled low-strength material for utilities and structures in accordance with HSS Subsection 314.03(A) – Placement.

END OF SECTION

This page intentionally left blank.

SECTION 31 23 19
DEWATERING

PART 1 – GENERAL

1.01 SUMMARY

A. Description:

1. Designing, furnishing, installing, maintaining, operating, and removing temporary dewatering systems as required to lower and control water levels and hydrostatic pressures during construction.
2. Testing, treating, and disposing of pumped water in accordance with permit requirements.
3. Recharging groundwater.
4. Constructing, maintaining, observing and, except where indicated or required to remain in place, removing equipment and instrumentation when no longer needed.

B. Section Includes:

1. Surface Drainage
2. Drainage of Excavated Areas
3. Dewatering
4. Observation Wells/Piezometers
5. Portions of System to be Left in Place
6. Portions of System to be Removed

C. Related Sections:

1. Section 31 40 00 – Shoring and Underpinning
2. Section 31 50 00 – Excavation Support and Protection

1.02 REFERENCES

A. ASTM International (ASTM):

1.	ASTM D1527	Standard Specification for Acrylonitrile-Butadiene-Styrene (ABS) Plastic Pipe, Schedules 40 and 80
2.	ASTM D1785	Standard Specification for Poly (Vinyl Chloride) (PVC) Plastic Pipe, Schedules 40, 80, and 120
3.	ASTM D2241	Standard Specification for Poly (Vinyl Chloride) (PVC) Pressure-Rated Pipe (SDR Series)

4.	ASTM D2466	Standard Specification for Poly (Vinyl Chloride) (PVC) Plastic Pipe Fittings, Schedule 40
5.	ASTM D2564	Standard Specification for Solvent Cements for Poly (Vinyl Chloride) (PVC) Plastic Piping Systems
6.	ASTM D2996	Standard Specification for Filament-Wound "Fiberglass" (Glass-Fiber-Reinforced Thermosetting-Resin) Pipe
7.	ASTM D2997	Standard Specification for Centrifugally Cast "Fiberglass" (Glass-Fiber-Reinforced Thermosetting-Resin) Pipe
8.	ASTM D3517	Standard Specification for "Fiberglass" (Glass-Fiber-Reinforced Thermosetting-Resin) Pressure Pipe
9.	ASTM D5685	Standard Specification for "Fiberglass" (Glass-Fiber-Reinforced Thermosetting-Resin) Pressure Pipe Fittings
10.	ASTM F480	Standard Specification for Thermoplastic Well Casing Pipe and Couplings Made in Standard Dimension Ratios (SDR), SCH 40 and SCH 80

1.03 SUBMITTALS

A. General: Refer to Section 7.7 – Submittal Procedures, and Section 7.8 – Shop Drawings, Product Data, and Samples, for submittal requirements and procedures.

B. Submit the following for approval in accordance with the General Conditions requirements and with the additional requirements as specified for each:

1. Dewatering Plan:
   a. Provide narrative description of the dewatering system that will be used and duration of intended dewatering.
   b. Detailed description, including any graphics depicting the depth and extent of the drawdown cone that will be created by the dewatering and including any permanent facilities or improvements that will be affected by the dewatering.
   c. Settlement and groundwater monitoring plan for permanent structures where the resulting cone of depression exceeds 3 feet from static ground water levels and geotechnical engineer's quantification of the settlements that are expected to result.
   d. Engineer's estimate of quantities of water that will be generated and how these will be managed, including pretreatment that may be required and planned method of disposal.

2. Shop Drawings:
   a. Type of dewatering system proposed showing arrangement, location and depths of proposed system; complete description of equipment and materials to be used; installation procedure; well and piezometer development procedures; maintenance plan for dewatering system and piezometers; standby equipment and standby power supply (if required); and proposed location of points of discharge of water and settlement measuring procedure.
   b. Obtain approval of jurisdictional agencies prior to installation of system.

3. Documentation:
   a. Observe and record average flow rate and time of operation of each pump used in dewatering system. Provide appropriate devices such as totalizing flow meters for observing flow rates. Provide interior dewatering well drop tube and exterior filter piezometer to observe and record operating levels and filter levels. Submit data on approved form and in approved format during period the dewatering system is in operation.
   b. Observe and record elevation of groundwater in the piezometers, including those previously installed, on approved form and in approved format, during the period that the dewatering system is in operation. Sound depth to bottom of each piezometer monthly to ensure that soil particles are not building up in standpipe. Submit observation records promptly, regularly, and as directed.
   c. During dewatering, make daily observations. After dewatering levels have stabilized, observations frequency may be reduced, as approved.
   d. Submit maintenance schedule for piezometers and dewatering system. Record and submit maintenance records for each piezometer and dewatering well or dewatering system component weekly, or as approved
   e. Provide drill logs and installation details of all dewatering system components and piezometers 24 hours after installation.
   f. Provide details, include as surveyed locations, of monitoring instrumentation within a week of installation.

1.04 QUALITY ASSURANCE

A. General: Refer to Section 7.10 – Quality Assurance, for quality requirements and procedures.

B. Qualifications: The design, implementation, evaluation, and maintenance of the dewatering system shall be under the supervision of a specialist with a minimum of 5 years experience in responsible control of work similar to that proposed.

C. Design Criteria:

1. Provide dewatering system that will reduce hydrostatic pressure and lower groundwater levels below excavation levels as necessary for safe and proper prosecution of the Work and that will result in obtaining stable, substantially dry subgrade for subsequent operations.

2. Dewatering points shall be designed to ensure that piping of native materials does not occur.

3. Well casing shall be strong and tough enough to resist the forces imposed on it during installation and those forces which normally be expected after installation.

D. Inspection: All dewatering systems shall be open for inspection by HART at all times.

1.05 SITE CONDITIONS

A. Subsurface Conditions: Reports of subsurface investigations are available as listed in the General Conditions requirements.

B. Permits:

1. Prior to discharging water, obtain all permits required from jurisdictional agency.
2. Control discharge of water in accordance with the General Conditions requirements, if specified.

C. Responsibilities:

1. Design and install dewatering system to accomplish groundwater control as specified.
2. Monitor, and report as required, discharge from dewatering system to determine if water quality meets the requirements of jurisdictional agency. Modify dewatering system as necessary to meet the requirements of jurisdictional agency.
3. Measure to determine if movement occurs in adjacent areas by dewatering operations; take approved measures to minimize movement and prevent damage to affected properties, buildings, structures, utilities or facilities. Establish criteria for acceptable tolerances.
4. Take measures to prevent damage to properties, buildings, structures, utilities, and facilities resulting from groundwater pumping.
5. Modify system if it causes or threatens to cause damage to properties, buildings, structures, utilities, or facilities.
6. Repair, as approved, damage, disruption or interference to properties, buildings, structures, utilities, or facilities resulting from dewatering operations.
7. Design Plans may designate locations or areas where lowering of groundwater will not be permitted.
8. Locations of dewatering system elements and piezometers may be adjusted in field to suit job conditions, as approved.
9. Operate dewatering system without interruption until directed otherwise.

D. Coordination with Other Contractors:

1. These Specifications govern requirements for access to areas outside Contract limits.
2. Coordinate installation and operation of dewatering system and piezometers with others concerned and with other contractors, if applicable.
3. If an adjoining contract requires installation of portions of the adjoining contract dewatering system or piezometers within Contract limits, allow access for installation.

PART 2 – PRODUCTS

2.01 MATERIALS

A. Thermoplastic casing shall meet the requirements of ASTM F480 and the following:

1. PVC Pipe: reference ASTM D1785 or ASTM D2241
2. PVC Fittings: reference ASTM D2466

3. Connections: reference ASTM D2564

4. ABS Pipe: reference ASTM D1527

B. Thermoset casing shall meet the following requirements:

1. Filament Wound Resin Pipe: reference ASTM D2996

2. Centrifugally Cast resin Pipe: reference ASTM D2997

3. Glass Fiber reinforced Resin Pressure Pipe: reference ASTM D3517

4. Fittings: reference ASTM D 5685

C. Dewatering well casings shall use materials conforming to permit requirements.

D. Observation Wells and Piezometers: Provide in conformance with the requirements of Section 31 09 00 – Geotechnical Instrumentation and Monitoring of Earthwork

E. Pumps and evacuators shall be of type and size suitable to pumping groundwater from the installation over the time interval and operational frequency planned.

PART 3 – EXECUTION

3.01 SURFACE DRAINAGE

A. Intercept and divert surface drainage away from excavations, piezometers, and dewatering wells by use of dikes, curb walls, ditches, pipes, sumps, or other means.

B. Design surface drainage systems to prevent erosion.

C. Remove surface drainage system when no longer required.

D. Remove debris and restore site to original conditions.

3.02 DRAINAGE OF EXCAVATED AREAS

A. Provide and maintain ditches of adequate size to collect surface and subsurface water and divert it into sump for draining or pumping into channels or storm sewers, as approved.

B. Install settling basins, tanks, or other approved apparatus as necessary to bring the discharge into compliance with permit requirements.

C. When no longer necessary, backfill and seal drainage ditches, sumps, and settling basins with approved material.

3.03 DEWATERING

A. Coordinate dewatering installation to prevent conflict with other construction activities. Refer to Section 31 40 00 – Shoring and Underpinning and Section 31 50 00 – Excavation Support and Protection.

B. Contractor to submit drawings and procedure of the dewatering system for approval by Engineer. If site conditions require modification of the dewatering system, implement modifications to achieve specified design criteria prior to excavation.

C. Install any required instrumentation in accordance with the associated settlement and ground water level monitoring plan.

D. Demonstrate by approved methods that discharged sand content from each well meets the design criteria specified in Article 1.04 herein.

E. Discharge subsurface water clear of the work area and in accordance with permit requirements.

F. Maintain continuous and complete effectiveness of the installation through regularly scheduled maintenance of well screens, pumps, piezometers, and electrical and piping systems.

G. Maintain water level so that no damage to the exposed work area or structure can occur. Cone of depression outside of the immediate work zone shall be limited so as not to adversely affect existing improvements so as to limit total settlement of existing improvements falling within the plan limit of the cone of depression to no more than 1/2 inch.

H. During backfill operations, the extent of dewatering may be reduced when approved, provided the water level does not result in uplift pressure in excess of 80 percent of downward pressure produced by the weight of structure and backfill in place.

I. Reduce water level to specified criteria at least 48 hours in advance of excavation.

J. Maintain dewatering operations until completion of Work.

K. Dewatering operations that adversely impact or distress existing improvements shall be remediated to property owner's satisfaction or work interrupted as necessary to prevent further damage. HART reserves the right to require a cessation of dewatering activities where activities are unduly impacting existing facilities outside of the defined work zone.

L. Dewatering of drilled shaft excavations, where proposed, will be subject to justification and verification that adverse impacts to either or both the excavation and ground water system are addressed, and measures in place to manage the anticipated flow volumes.

3.04 OBSERVATION WELLS/PIEZOMETERS

A. Prior to dewatering operations, install piezometers at locations shown, or as approved and to the depths shown or approved. Response of selected instrument type, that is observation well or piezometer, shall be no greater than 4 hours lag time. A minimum of two observation wells/piezometers are required for single dewatering well where drawdown will exceed 5 feet at the well. Additional piezometers are required where an array or series of wells or dewatering points extends for a distance of more than 50 feet. Monitoring points shall be located to establish the cone of depression and zone of influence; having at least one well/piezometer normal to the axis of the dewatering well or well series and another transverse to it the former axis. Observation points too distant to discern a drawdown will be deemed unacceptable and must be replaced.

B. Verify installed piezometer tip elevation.

C. Reinstall or replace piezometers that do not comply with requirements at no additional cost to HART.

D. Forty-eight hours after completion of each standpipe piezometer installation, prove proper functioning by performing falling head tests. Submit test records within 24 hours of test completion.

E. Operate dewatering system so that groundwater level in piezometers is maintained continuously within prescribed limits.

F. Protect and maintain piezometers in good operating condition until completion of the Contract.

G. Promptly replace piezometer or dewatering well that is damaged or destroyed.

H. Terminate piezometer readings when approved.

3.05 PORTIONS OF SYSTEM TO BE LEFT IN PLACE

A. When specified, leave portions of dewatering system in place.

3.06 PORTIONS OF SYSTEM TO BE REMOVED

A. Upon completion of the Contract, remove standpipe piezometers and well casings, unless otherwise specified, to a depth of 2 feet minimum below ground surface.

B. Backfill voids, well, and piezometer casings with bentonite-cement grout.

C. Backfill remaining space with compacted earth and restore ground surface to its original condition.

END OF SECTION

This page intentionally left blank.

SECTION 31 32 00
SOIL STABILIZATION

PART 1 – GENERAL

1.01 SUMMARY

A. Description: This Section includes requirements for constructing stabilized soil-cement jet grout columns and soil mass for foundation support, for excavation support, or ground water control. The Work includes drilling test probes; mobilizing specialty equipment for jet grouting; determining suitable jet grouting procedures and grout mixes; performing a test program and evaluating test results; installing production jet grout columns; installing monitoring instrumentation; and providing traffic control, restoration, and cleanup and disposal of waste materials resulting from jet grouting including all labor, equipment, and materials to complete the Work.

B. Section Includes:

1. General
2. Trial/Test Programs
3. Production Jet Grouting
4. Laboratory Testing
5. Finishing

1.02 REFERENCES

A. American Petroleum Institute (API):

1.	API 13A	Specification for Drilling-Fluid Materials
2.	API RP 13B-1	Recommended Practice for Field Testing Water-Based Drilling Fluids

B. ASTM International (ASTM):

1.	ASTM C39	Standard Test Method for Compressive Strength of Cylindrical Concrete Specimens
2.	ASTM C42	Standard Test Method for Obtaining and Testing Drilled Cores and Sawed Beams of Concrete
3.	ASTM C109	Standard Test Method for Compressive Strength of Hydraulic Cement Mortars (Using 2-inch or [50-mm] Cube Specimens)
4.	ASTM C150	Standard Specification for Portland Cement
5.	ASTM C172	Sampling Freshly Mixed Concrete
6.	ASTM C219	Standard Terminology Relating to Hydraulic Cement

7. ASTM C494 — Standard Specification for Chemical Admixtures for Concrete
8. ASTM C873 — Standard Test Method for Compressive Strength of Concrete Cylinders Cast in Place in Cylindrical Molds
9. ASTM C939 — Standard Test Method for Flow of Grout for Preplaced-Aggregate Concrete (Flow Cone Method)
10. ASTM D559 — Standard Test Methods for Wetting and Drying Compacted Soil-Cement Mixtures
11. ASTM D1586 — Standard Test Method for Standard Penetration Test and Split-Barrel Sampling of Soils
12. ASTM D1632 — Standard Practice for Making and Curing Soil-Cement Compression and Flexure Test Specimens in the Laboratory
13. ASTM D1633 — Standard Test Methods for Compressive Strength of Molded Soil-Cement Cylinders
14. ASTM 2113 — Practice for Diamond Core Drilling for Site Investigations
15. ASTM D2216 — Standard Test Method for Laboratory Determination of Water (Moisture) Content of Soil and Rock by Mass
16. ASTM D2434 — Standard Test Method for Permeability of Granular Soils (Constant Head)
17. ASTM D2850 — Standard Test Method for Unconsolidated-Undrained Triaxial Compression Test on Cohesive Soils
18. ASTM D2938 — Compressive Strength of Cylindrical Concrete Specimens
19. ASTM D3550 — Standard Practice for Thick Wall, Ring-Lined, Split Barrel, Drive Sampling of Soils
20. ASTM D4832 — Preparation and Testing of Controlled Low Strength Material (CLSM) Test Cylinders
21. ASTM D5079 — Preserving and Transporting Rock Core Samples
22. ASTM D6032 — Determining Rock Quality Designation of Rock Core
23. ASTM E329 — Standard Specification for Agencies Engaged in Construction Inspection and/or Testing

C. U.S. Department of the Army, Office of the Chief of Engineers (U.S. Army Corps of Engineers), Laboratory Soil Testing, EM 1110-2-1906:

1. Appendix II — Unit Weights, Void Ratio, Porosity, and Degree of Saturation
2. Appendix IV — Specific Gravity
3. Appendix XI — Unconfined Compression Test

D. U.S. Department of Interior, Bureau of Reclamation, Earth Manual:

1. Appendix E-1 Disturbed Sampling of Soils
2. Appendix E-2 Undisturbed Sampling of Soils
3. Appendix E-18 Field Permeability Tests in Boreholes

1.03 DEFINITIONS

A. Additives: Additional materials such as bentonite, clay, attapulgite clay, lime, dilute acids, fly ash retarding agents, and quick setting agents that are added to the grout mixture to achieve the desired properties (i.e., workability or engineering properties).

B. Bearing Material: Soil or rock deposits with adequate strength and low compressibility to provide support for long-term loads transmitted by the jet grout columns.

C. Deep Soil Mixing: Soil-cement mixing construction method used to construct in-place walls or treat soils in situ to depths in excess of that achievable by shallow soil mixing methods. This is accomplished with a series of grout-stabilized soil columns, which depending on design requirements can be overlapped and with columns varying in diameter. Generally, the stabilized soil columns are formed by a crane-mounted drill attachment with auger head typically consisting of multiple cutting edges and mixing blades. As the auger head is advanced into the soil, grout is pumped through the hollow drill shaft and injected into the soil at the pilot tip. The cutting edges and mixing blades blend the soil and grout with a shearing motion. When the design depth is reached, the auger head is raised to expose the mixing blades at the surface, and then to ensure complete mixing of the soil-cement column, it is re-advanced without grout injection to the bottom. Depth is limited by the torque of the drill.

D. Ground Improvement: A soil improvement (remediation) technique whereby grout is mixed with in situ soils to achieve desired physical properties. Depending on the depth and method employed, this is variously termed “deep soil mixing,” “shallow soil mixing,” or “jet grouting.”

E. Grout: A stable colloidal mixture of water and Type II portland cement.

F. Jet Grouting: The process of creating stabilized soil-cement columns in place utilizing a grout mix delivered at pressure through a special drill bit that has high-speed horizontal jets. High-pressure water or water and air jets are used to excavate columns in the materials to be stabilized. The soil-cement columns are constructed by withdrawing the rotating drill bit at a slow, constant speed; cutting the soil with water or water and air jets; pumping a tremie cement grout slurry and mixing it simultaneously with soil cuttings through the drill bit; and thoroughly mixing the soil cuttings and grout to produce continuous columns (or areas) of consistent geometry and quality.

G. Monitor: Drill pipe designed to convey the three elements of the jet grouting process (air, water, and grout) to the two injection points at the base of the assembly. The lower nozzle(s) injects grout under pressure into the void that has just been excavated by means of a high-pressure water jet injected through the upper nozzle. The cutting action of the water jet is enhanced by surrounding it within a concentric collar of compressed air.

H. Shallow Soil Mixing: Site Conceptual Model (SCM) construction method used to construct in-place walls or treat soils in situ to a maximum depth of about 40 feet. This is

accomplished with a series of grout-stabilized soil columns, which depending on design requirements can be overlapped and each column can reach up to 16 feet in diameter. Generally, the stabilized soil columns are formed by excavator or crane-mounted drill attachment with large diameter auger head, which may be single, or multiple cutting edges and mixing blades. As the auger head is advanced into the soil, grout is pumped through the hollow drill shaft and injected into the soil at the pilot tip. The cutting edges and mixing blades blend the soil and grout with a shearing motion. When the design depth is reached the auger head is raised to expose the mixing blades at the surface and then to ensure complete mixing of the soil-cement column, is re-advanced without grout injection to the bottom.

I. Stabilized Soil Columns: Overlapping jet grout columns constructed to stabilize potential caving soil formations to provide a continuous stabilized zone for foundation support at selected locations shown on the Design Plans. Stabilized soil columns also shall provide a uniform, continuous stabilized layer for groundwater control.

1.04 SUBMITTALS

A. General: Refer to Section 7.7 – Submittal Procedures, and Section 7.8 – Shop Drawings, Product Data, and Samples, for submittal requirements and procedures.

1.05 QUALITY ASSURANCE

A. General: Refer to Section 7.10 – Quality Assurance, for quality requirements and procedures.

B. Qualifications Package:

1. The Work of this Section is specialized. The Contractor performing this work shall be a reputable firm regularly engaged in the performance of jet grouting.

2. Testing shall be performed by an AASHTO or HDOT accredited, independent testing agency, which can certify compliance with the requirements of ASTM E 329.

3. Both the firm's experience and the qualifications of personnel scheduled to perform the jet grouting shall be relevant to anticipated subsurface materials, water conditions, site conditions, and special construction techniques required. No work will be allowed to commence until HART has accepted qualifications package as set forth below.

   a. Within 30 calendar days after Notice to Proceed, submit five copies of the jet grouting contractor's qualification packages to HART. The package shall include both Contractor's experience portion and a proposed personnel experience portion, as detailed below.

      1) HART will accept or reject the qualifications package within 14 calendar days after receipt of a completed submittal.

      2) Additional time required due to incomplete or unacceptable submittals will not be cause for time extension, impact or delay claims.

      3) All costs associated with incomplete or unacceptable submittals will be at no additional cost to HART.

   b. The Contractor's qualifications portion shall include the following:

      1) At least three qualifying (defined as successfully completed) jet grouting projects within last 5 years meeting or exceeding the following minimums:

a) Not less than 2,000 cubic yards of jet grouting, each project.
b) Installation shall have been within similar ground conditions, specifically in soft cohesive soils.
c) Similar diameter and depth of jet grouting as shown in the contract.
d) Installation equipment and methods used similar to type being proposed for this work.

2) List for each qualifying project the name and location of the project. Provide verifiable references for each qualifying project:
   a) Project owner or entity for which work was performed, including name and telephone number of representative who can attest to successful completion of the work.
   b) The design consultant on the project, including name and telephone number of representative who can attest to successful completion of the Work.

3) Project Summary Containing:
   a) Description or nature of the overall project for which jet grouting work was performed.
   b) Start date and completion date of the jet grouting work.
   c) Total Contract amount for the jet grout work.
   d) Description of the project site conditions and subsurface conditions.
   e) Details of the completed jet grouting including:
      i) Purpose of jet grouting.
      ii) Diameter, depth and spacing.
      iii) Name of drill operators and on-site supervisors.
      iv) Installation methods, including drilling method, and techniques used.
      v) Verification testing summary and other information documenting successful performance of the jet grouting.
      vi) Other information relevant to demonstrating jet grouting Contractor's qualifications.

c. The personnel qualifications portion shall include the following:
   1) Identify the drill operators and on-site supervisors who will be assigned to the Work.
   2) Include a summary of each individual's experience in sufficient detail as specified herein. At a minimum, the personnel experience shall show:
      a) Jet grouting operations for at least three projects in last 5 years, for supervisory personnel and drill operators.
      b) Responsibility or role and duration on indicated project.
      c) On-site supervisor shall have a minimum of 2 years jet grouting construction supervisory experience.
      d) Written verification of on-site supervisor's experience.
      e) Drill operators shall have at least 1 year jet grouting construction experience.
      f) At least one project listed shall be as indicated in the Contractor's experience category.

3) The accepted drill operators and supervisors shall be on site at all times during the jet grouting construction work.

4. Accreditation of proposed independent testing laboratory proposed for Contractor's required quality control and quality assurance testing.

C. Work Plan:

1. Submit a detailed work plan at least 30 days prior to the work describing the proposed grouting methods and equipment to be used including the following. Provide sufficient detail to allow HART to be the sole judge of whether or not the proposed equipment, materials, and procedures will meet the requirements of this Contract. No jet grouting work shall start until the work plan and grouting method have been accepted by HART.
   a. Description of grout plant, equipment, and manufacturer's literature describing their capabilities.
   b. Methods and equipment proposed for drilling jet grout column holes.
   c. Arrangement and description of grout mixing, recording, and injection equipment, layout of jet grout columns based on the typical layout shown on the Contract Documents, and other details to illustrate the plan for setting up at each location where jet grouting is required.
   d. Schedule and sequence for completing jet grouting test program and production jet grouting work.
   e. Grout mix design, sources of mix materials, admixtures (including manufacturer's literature), and material data demonstrating compliance with requirements specified herein. Grout mix design shall include target range for specific gravity, Marsh Viscosity, and/or bleed that will produce acceptable grout strength. Provide 7 and 28-day design compressive strengths for neat cement grout mix.
   f. Quality control procedures including record keeping, field testing, sampling, and laboratory testing of completed jet grout columns.
   g. NPDES Best Management Practices for all of the Contractor's jet grouting and related work

D. Test Program:

1. Perform a test program as specified in Part 3 herein, prior to commencing production jet grouting.

PART 2 – PRODUCTS

2.01 GROUT MIX MATERIALS

A. Portland Cement and Water:

1. Portland cement shall conform to ASTM C150, Type I or III. Slag cement or fly ash will not be allowed without the acceptance of HART and submission of test data by the Contractor that confirms no deleterious impact to the soil-grout mass. Cement shall be homogenous is composition and properties, and shall be manufactured using the same methods at one plant by one supplier.

2. Water used for drilling grout holes, in grout mixing and in grout injection shall be clean, potable and free of sewage, oil, acid, alkali, salts, suspended solids, organic materials or other deleterious materials.

2.02 JET GROUTING EQUIPMENT

A. General:

1. All equipment used for drilling grout holes; lowering, raising and rotating jet monitors; mixing grout; supplying pressurized grout and air or air water to jet monitors; and jet monitors used to construct the soil-grout mass walls shall have proven performance records for use in jet grouting work.

2. Spare parts, back up equipment and maintenance personnel shall be available to maintain jet grouting equipment in satisfactory operating condition at all times during execution of the jet grouting work, and to ensure uninterrupted grout injection in case of mechanical breakdown or equipment malfunction during the course of the Work.

B. Drilling Equipment:

1. Drilling equipment shall be of a type and capacity suitable for drilling required grout hole diameters and depths at the locations where jet grouting is to be performed in ground conditions equivalent to those conditions described in the Geotechnical Baseline Report (GBR) for these locations, if a GBR is provided in the Contract Documents, or if no GBR is included in the Contract Documents, to those conditions which, based on the Geotechnical Data Report (GDR), are expected at those locations.

2. Drilling equipment shall be of a type and capacity suitable for lowering, raising, and rotating jet grout monitors to the depths and at the rates required to construct the soil-grout masses as shown on the Design Plans and as specified herein.

C. Jet Grouting Monitors: Use jet grouting monitors having performance characteristics, operating ranges and capacities suitable for producing grout columns to the depths shown on the Contract Documents and as specified herein.

D. Grout Mixing and Injection Equipment: Use grout mixers and holding tanks, water tanks, air compressors, and pumps of sufficient capacity to ensure adequate supplies of grout, air, and water at required pressures to the jet grouting monitors to produce grout columns to the depths shown on the Contract Documents and as specified herein.

E. Proportioning of Grout Mixes: The grout plant shall include calibrated meters for measuring accurately the volume of water and any liquid admixtures used in each batch of grout, and calibrated scales for measuring accurately the weight of cement and any solid admixtures used in each batch of grout.

F. Monitoring of jet grouting performance: Equipment used to measure and record jet grouting parameters shall consist of automatic, real time data collection systems.

2.03 EQUIPMENT FOR POST-JET GROUTING EXPLORATORY BORINGS

A. Drilling equipment used for performing pre-jet grouting and post-jet grouting exploratory borings shall be of a type and capacity suitable for drilling the required boreholes to the

diameters and depths specified herein, and at the locations where jet grouting is to be performed.

B. Soil-grout masses shall be cored in post-jet grouting exploratory boreholes with a nominal PQ size (minimum diameter 3.345 inches) triple tube diamond bit core barrel meeting the requirements of ASTM D2113.

PART 3 – EXECUTION

3.01 GENERAL

A. Any jet grout hole lost or damaged as a result of mechanical failure of equipment, inadequacy of grout, air, or water supplies, or improper drilling, grout mixing or injection procedures shall be backfilled with cement grout and replaced by another hole, drilled and injected by the Contractor at no additional cost to HART. Jet grout holes which encounter obstructions which cannot be penetrated by the jet grout equipment, shall be backfilled with cement grout and replaced by another hole, drilled and injected by the Contractor. In the event that there are jet grout holes which pass by obstructions, where the obstruction acts as a "shadow" to the grouting, such that the obstruction creates an ungrouted void behind the obstruction, additional jet grout hole(s) shall be drilled and injection by the Contractor.

Payment for additional jet grout holes required due to obstructions or obstruction shadows will be made per linear foot of additional jet grout hole satisfactorily completed in place.

B. Equipment for mixing, holding and pumping grout shall be in a secure location and shall be operated to minimize spillage of material. No material will be allowed to enter storm drains or other drainage courses.

C. Any post-jet grouting exploratory borehole that cannot be completed to the full depth required, or for which the number or percentage recovery of soil-grout mass samples obtained is determined by HART to be insufficient to adequately characterize the soil-grout mass at the borehole location, because of mechanical failure or improper functioning of equipment or improper drilling and sampling procedures shall be backfilled with cement grout and replaced by the Contractor at no additional cost to HART.

3.02 TRIAL/TEST PROGRAMS

A. Develop and execute a test program prior to the start of production jet grouting to evaluate the effectiveness of the proposed methods and equipment to produce soil-grout masses meeting the geometric requirements shown on the Design Plans and performance criteria as specified herein. The purpose of the test program shall be for the Contractor to determine appropriate jet grouting systems and grouting parameters for grout mix, grout pressures, rotational speed, lifting rate, grout flow rate, number and size of jet nozzles, and drilling methods, for the anticipated conditions where jet grouting is required. In addition, the test program also shall demonstrate that the Contractor's means and methods will achieve the specified diameter, depth, and material property requirements shown on the Contract Documents. During the testing program, utilize the same suitable jet grouting equipment available including water jet, and water/air jet, as it intends to use for its production jet grouting work.

B. Select the location of the test program subject to the approval of HART. The locations shall be selected to be similar to the ground conditions expected during production jet grouting.

C. As part of the test program, drill test borings, each extending to the depths shown on the Contract Documents, at the approximate locations shown on the Contract Documents. The test borings shall be for the purpose of obtaining additional subsurface information for the soil stabilization by jet grouting and to verify the subsurface conditions at the site. Soil samples (or continuous core samples using triple tube core barrels) shall be obtained from the test borings generally at 5-foot intervals in accordance with ASTM D 1586 and ASTM D 2113, or whenever directed by HART. The sampling depths and intervals may be modified by HART in the field. The test borings shall be performed in the presence and continuous monitoring of HART. Provide HART a minimum of 7 days advance notice to schedule the observation and logging of the test borings.

D. The jet grout test program shall meet the following requirements:

1. At each test program site, a minimum of three grout columns shall be constructed to the same bottom elevation as shown on the Design Plans.

2. Daily records shall be kept for the jet grouting performed for each test program. Records shall be submitted daily to HART during jet grouting operations.

3. A minimum of one post-jet grouting exploratory boreholes shall be drilled at each test program site in accordance with the requirements of this Section. The locations of the exploratory boreholes within specific grout columns shall be selected by HART.

   a. Prepare a log summarizing the results of each post-jet grouting exploratory boring, and digital photographs of the recovered core. The log shall include rock core recovery and RQD determined in accordance with ASTM D6032, and a physical description of the core, noting rod drops or water losses during coring, depths and lengths of core loss or breakage, any honeycombed areas, large particles, or zones of incomplete mixing of soil with cement. Digital photographs may be submitted electronically and shall include a label identifying the boring location and depth, and a tape, visible in each photograph.

   b. Place core in core boxes, and immediately after logging and photographing the core, wrap all core in plastic wrap and seal with duct tape, to preserve moisture content. For each boring, select a minimum of three specimens from varying depths for testing. Preserve and transport in accordance with ASTM D5079.

   c. HART will inspect the core samples and check for segregation.

   d. Select six samples from each test jet grout column cored and perform compression tests on four of the samples in accordance with ASTM D 1633 or ASTM D 2850, as appropriate.

4. The minimum unconfined compressive strength of the jet grout columns shall be 200 and 400 psi at 7 and 28 days, respectively, for the soil-cement material for jet grout columns.

   a. Acceptance or rejection of the unconfined compressive strength of the jet grout column will be based on the average unconfined compressive strength test results of the four core samples obtained from the same jet grout column.

b. The lowest unconfined compressive strength of the four core samples shall not be less than 80 percent of the minimum compressive strength indicated in the contract documents.

c. In addition, only one of the four cores tested shall be below the minimum compressive strength indicated in the Contract Documents.

E. Subject to the results of the test program, HART, at its sole discretion, may require the Contractor to modify the jet grout procedures and equipment to achieve acceptable results. Depending on the test program results, and extent of modifications necessary, the Contractor may be required to construct another test section, which shall be at no additional cost to HART. The location will be selected by HART.

F. Do not start construction of any production jet grout columns until it receives written acceptance from HART of the construction procedures, materials, and equipment developed in the testing program that produced acceptable results.

3.03 PRODUCTION JET GROUTING

A. Perform production jet grouting to construct soil-grout masses at locations and with dimensions shown on the Design Plans and as specified herein.

B. Field layout of jet grout drill holes shall comply with the following requirements:

1. Setting out plus or minus 0.25 feet of the theoretical position shown on the Contractor's planned layout of grout columns.

2. Drill rig mast shall be aligned within 0.5 degrees of the theoretical column axis alignment in all directions, prior to start of drilling.

3. At completion of drilling and prior to grouting, it shall be demonstrated that the distal end of the drill hole is within plus or minus 0.25 feet of the theoretical end point of the drill hole. If this is not satisfied, provisions shall be made to redrill the hole, or to place a closure column when a "window" between adjacent columns is possible due to the drill hole misalignment.

C. The arrangement of the grouting equipment shall provide continuous circulation of grout prior to its injection. The equipment and lines shall be prevented from becoming fouled by determining the set time of the grout mix, monitoring the time that has elapsed from when a batch of grout has been mixed, maintaining grout ready to be injected in constant circulation, and periodically flushing the grout system with water. Grout that cannot be placed, for any reason, within 2 hours after mixing shall be wasted.

D. During jet grouting, free return flows shall be maintained at all times. If the Contractor observes a reduction in flow rate, measures shall be implemented immediately to reestablish the original flow rate.

E. Conduct all jet grouting in a manner such that there is no heave, settlement or loss of support of existing structures and utilities.

F. Cube samples shall be prepared from the grout mix two times during each work day. Samples shall be taken from production grout batches. A minimum of two grout cubes shall be cast each time sampling is performed. The unconfined compressive strength of one of these samples shall be tested at 7 days; the strength of the other sample shall be tested at 28 days.

G. Soil-grout cylinder samples shall be prepared from wet grab samples. Wet grab sampling of the soil-grout mixture shall be performed with a frequency of once per every 100 jet grout columns, with a minimum of two sampling rounds at each access structure location or other jet grout area shown on the Design Plans. Each sampling round shall consist of obtaining three samples, at depths selected by HART, from a single jet grout element location. The sampler device shall be lowered to the target depth, opened to obtain a sample, closed, and expeditiously raised to the ground surface. The retrieved jet grout shall be wet-sieved in accordance with ASTM C172 using a sieve with 1.5 inch openings. Gravel retained on the sieve shall be discarded, and cohesive soil material retained on the sieve shall be cut into pieces that will pass through the sieve. For each depth sampled, material passing the sieve shall be used to immediately cast four 6 inch diameter, 12 inch height cylinders. Testing shall be performed at 3 days, 7 days, and 28 days, with one spare cylinder.

3.04 LABORATORY TESTING

A. Provide sample preservation, storage and transport to the testing laboratory. All samples for testing will be selected by HART.

B. Test Grout cube samples for unconfined compressive strength in accordance with ASTM C109, at 7 and 28 days.

C. Test Soil-Grout mass core samples in accordance with ASTM D1633 or ASTM D2850, as appropriate.

D. Test Soil-Grout cylinder samples from wet grab samples in accordance with ASTM D4832, at 3, 7 and 28 days.

3.05 FINISHING

A. Cleanup and Site Restoration:

1. Clean up spilled materials and grout.

2. Restore street pavement and sidewalks and restore grouting locations to their pre-construction condition.

3. Remove grout intruded into adjacent utilities, sewers, and storm drains. Repair and restore affected utilities and any other structure(s) affected to condition existing before grouting operations.

END OF SECTION

This page intentionally left blank.

SECTION 31 50 00

EXCAVATION SUPPORT AND PROTECTION

PART 1 – GENERAL

1.01 SUMMARY

A. Description: Excavation support and protection consists of furnishing all transportation, labor, tools, equipment, materials, supplies, and incidentals and performing all labor necessary to provide safe and stable excavations throughout construction and to furnish, install, and remove temporary sheeting, shoring and bracing systems as required by the Work, and when directed by HART.

B. Section Includes:

1. Contractor's Responsibility
2. Detection of Movement
3. Installation Requirements
4. Soldier Piling
5. Sheet Piling
6. Bracing and Tiebacks
7. Soil Anchors
8. Soil Nailing
9. Secant Walls
10. Site Conditions
11. Removal of Excavation Support Systems
12. Restoration

C. Related Sections:

1. Section 03 05 15 – Portland Cement Concrete
2. Section 03 11 00 – Concrete Forming
3. Section 03 20 00 – Concrete Reinforcing
4. Section 03 30 00 – Cast-In-Place Concrete
5. Section 03 60 00 – Grouting
6. Section 31 23 19 – Dewatering

1.02 DEFINITIONS

A. Accepted Engineering Practice: Requirements that are compatible with standards of practice required by a registered Professional Engineer.

B. Excavation: All excavations made in the earth's surface. Any manmade cut, cavity, trench, or depression in an earth surface, formed by earth removal. Excavations are defined to include trenches.

C. Protective System: A method of protecting employees from cave-ins, from material that could fall or roll from an excavation face or into an excavation, or from collapse of adjacent structures. Protective systems include support systems, sloping and benching systems, shield systems, and other systems that provide the necessary protection.

D. Shield (Shield System): A structure that is able to withstand the forces imposed on it by a cave-in and thereby protects employees within the structure. Shields may be either pre-manufactured or job-built.

E. Shoring Systems:

1. Anchored Sheet Pile Wall: A structure designed to provide lateral support for a soil mass; derives stability from passive resistance of the soil in which the sheet pile is embedded and the tensile resistance of the ground anchors.

2. Anchored Soldier Beam with Lagging Wall: A structure designed to provide lateral support for a soil mass; derives stability from passive resistance of the soil in which the soldier beam is embedded and the tensile resistance of the ground anchors. Generally designed as flexible structures having sufficient lateral movement to mobilize active earth pressures and a portion of the passive pressure.

3. Braced Excavation: A structure designed to provide lateral support for a soil mass; derives stability from passive resistance of the soil in which the vertical members are embedded and from the structural capacity of the bracing members. For purposes of these Specifications, the vertical members of the braced excavation system include steel sheet piling or soldier beams comprised of steel H-piles, wide flange sections, or other fabricated sections that are driven or installed in drilled holes. Wales are horizontal structural members designed to transfer lateral loads from the vertical members to the struts. Struts are structural compression members that support the lateral loads from the wales.

4. Cantilever Sheet Pile Wall: A structure designed to provide lateral support for a soil mass; derives stability from passive resistance of the soil in which the sheet pile is embedded.

5. Cantilever Soldier Beam with Lagging Wall: A structure designed to provide lateral support for a soil mass; derives stability from passive resistance of the soil in which the soldier beam is embedded.

6. Ground Anchors: For purposes of these Specifications, ground anchors shall be cement-grouted tiebacks designed, furnished, installed, tested and stressed in accordance with these Specifications.

7. Soldier Beam: For purposes of these Specifications, soldier beams include steel H-piles, wide flange sections, or other fabricated sections that are driven or set in

concrete in drilled holes. Lagging refers to the members spanning between soldier beams.

F. Sloping System: A method of protecting workmen from cave-ins by sloping the sides of the excavation away from the excavation. The slope angle varies with the soil type, surcharges, and weather.

G. Trench: A narrow excavation in relation to its length. In general, the depth is greater than the width and the width of a trench (measured at the bottom) is generally less than 15 feet.

1.03 REFERENCES

A. American Railway Engineering and Maintenance-of-Way Association (AREMA):

1. AREMA Publication — Manual for Railway Engineering, Chapter 8, Part 20, Section 20.3, Computation of Lateral Forces Acting on Bulkheads.
2. AREMA Publication — Manual for Railway Engineering, Chapter 8, Part 28, Temporary Structures for Construction.

B. American Wood Preservers Association (AWPA):

1. AWPA Standard C3 — Piles

C. ASTM International (ASTM):

1. ASTM A36 — Standard Specification for Carbon Structural Steel
2. ASTM A328 — Specification for Steel Sheet Piling
3. ASTM A416 — Standard Specification for Steel Strand, Uncoated Seven-Wire for Prestressed Concrete
4. ASTM A563 — Specification for Carbon and Alloy Steel Nuts
5. ASTM A572 — Standard Specification for High-Strength Low-Alloy Columbium-Vanadium Structural Steel
6. ASTM A586 — Standard Specification for Zinc-Coated Parallel and Helical Steel Wire Structural Strand
7. ASTM A615 — Standard Specifications for Deformed and Plain Carbon-Steel Bars for Concrete Reinforcement
8. ASTM A722 — Specification for Uncoated High-Strength Steel Bar for Prestressing Concrete
9. ASTM C33 — Specification for Concrete Aggregates
10. ASTM F436 — Specification for Hardened Steel Washers

D. American Welding Society (AWS):

1. ANSI/AWS D1.1 — Structural Welding Code – Steel

E. Post-Tensioning Institute (PTI):

1. Post-Tensioning Manual Chapter 4, Recommendations for Prestressed Rock and Soil Anchors, 4th Edition, 2004

F. Federal Highway Administration:

1. Manual for Design and Construction of Soil Nail Walls, 1999, Publication No. FHWA-SA-96-069R

2. Lateral Support Systems and Underpinning, Report No FHWA-RD-75-128, 129, & 130, April 1976. http://www.fhwa.dot.gov/engineering/geotech/library_arc.cfm?pub_number=55

G. State of California, Department of Transportation (Caltrans):

H. Caltrans Manual, January 1990; Trenching and Shoring Manual, Rev 12 Jan. 2000 http://www.dot.ca.gov/hq/esc/construction/Manuals/OSCCompleteManuals/TrenchingandShoringManualRev12.pdfSUBMITTALS

1.04 SUBMITTALS

A. General: Refer to Chapter 7.7 – Submittal Procedures, and Chapter 7.8 – Shop Drawings, Product Data, and Samples, for submittal requirements and procedures.

B. Movement Detection Procedures: Submit procedures for detection of movement as specified in Article 3.02 herein.

C. Excavation Support Plan and Procedures: Design Plans, procedures, design calculations, and shop drawings for the intended excavation support systems as required for the Work. Submittal is for City's general information and in no way relieves the Contractor of complete responsibility for successful and safe performance of intended excavation methods and support systems.

1. Prepare and submit a written schedule and procedure, along with detailed drawings of the proposed excavations and excavation support systems.

2. Include installation procedures, excavation sequence, interface details, protection measures for existing structures and facilities, instrumentation and monitoring procedures to check performance, sequence and method of removal, and contingency plans for excessive wall or foundation movements.

3. The program shall take into account that excavations cannot extend beyond the right-of-way into adjacent properties above or below grade, unless otherwise indicated. Where tiebacks, soil anchors, soil nailing, or similar support systems are required, the secure permission from adjacent property owners to install such temporary and permanent systems.

D. Dewatering Plan: The Dewatering Plan required for the Work shall be in accordance with Section 31 23 19 – Dewatering, and show coordination with the Excavation Support Plan.

E. Shop Drawings: Submit shop drawings and material requirements for support systems, lagging, tieback anchors, sheeting systems, and internal bracing. Include the following:

1. Specific description of field quality control measures.

2. Details of interface with permanent structures.

3. Details of bracing struts and walers, if used, and proposed installation procedures, including method of preloading.

4. Detailed description of tieback soil anchors, soil nailing, and wales, if used, and the proposed installation procedure including method of grouting anchors, grout type, and mix proportions.

5. Details of preloading systems, pre-stressing systems, load measuring facilities, systematic schedule of preloading and pre-stressing operations, and sequence of construction.

6. Method and details for securing lagging.

7. Proposed method of providing for utility penetrations.

8. Assembly and erection details of members and connections for the system. Indicate welds by standard American Welding Society (AWS) welding symbols.

F. Calculations: Submit appropriate design calculations to support working drawings.

G. Professional Engineer's Certification: The Excavation Support Systems Plan, working drawings, and calculations shall be prepared, sealed, and signed by a Professional Engineer currently registered in the State of Hawaii. Select an engineer with at least 5 years of experience in the design and construction of excavations and excavation support systems and submit the selected engineer's resume demonstrating such experience.

H. Calibration Charts: Submit certified calibration charts for each jack-gage unit used for preloading.

I. Test Reports: Submit reports of performance tests and proof loading tests of soil anchors, certified by a Professional Civil Engineer with experience in geotechnical engineering currently registered in the State of Hawaii.

1.05 QUALITY ASSURANCE

A. General: Refer to Chapter 7.10 – Quality Assurance, for quality assurance requirements and procedures.

B. Employ only competent drillers, skilled in large-diameter boring work for the purpose of pre-boring holes for soldier piles.

C. Drillers selected shall have a minimum of 5 years of experience in pre-boring holes for piles or work of similar character.

D. Certify in writing the experience of drilling crew.

1.06 DESIGN GUIDELINES

A. Design excavation support systems to support earth pressures, utility loads, equipment, applicable traffic and construction loads, and other surcharge loads in a manner that will allow the safe and expeditious construction on permanent structures without movement or settlement of the ground and in a manner that will prevent damage to, or movement of, adjacent structures, utilities, or other facilities. Include evaluation of the effects of dewatering and flooding of excavation.

B. Design each member to support maximum loads that may occur during construction.

C. Carry bottom of support system to a depth below the main excavation as adequate to prevent lateral and vertical movement of ground both inside and outside of excavation.

D. Design the excavation support system to allow the required free excavated space for workers, concrete formwork, wall waterproofing, and drainage systems.

E. Design excavation support systems for staged installation and removal to conform to construction and backfill sequences as indicated.

F. Employ walers, struts, and tieback anchors for horizontal support as required for excavation faces to be retained by soldier piles and lagging, sheet piles, or concrete slurry walls. Provide struts with intermediate vertical and horizontal supports as required to prevent buckling. Struts shall be preloaded by wedging or jacking to 50 percent of the design load.

G. Provide diagonal bracing where needed for stability of the system. Use timber lagging, steel sheeting, or reinforced precast concrete sheeting or planking. Tiebacks and soil anchors will not be permitted to extend outside of right-of-way property limits, unless the Contractor has obtained written (notarized) permission from adjacent property owners to use their properties for such purposes.

H. Design piles or other vertical support members to be incorporated in a system employing tiebacks or soil anchors, to have the capability of resisting vertical components of tieback and anchor loads during all stages of excavation and construction.

I. Timber support systems, except lagging, shall be employed only for utilities and minor structures. Timber supporting members and lagging to be left in place shall be pressure-treated with wood preservative. Timber members shall be removed or cut off at elevations as directed by HART.

J. Where lagging is employed, design the lagging to safely support the loads.

K. Soil-nailed walls may be used where soil conditions are appropriate. Shotcrete facing is required for all soil-nailed walls. Include vertical strips of drainage matting before shotcreting to assure proper drainage.

L. Provisions shall be made to protect struts from excessive deformations and stress variations induced by temperature fluctuations.

M. Refer to Caltrans Trenching and Shoring Manual for other design guidelines.

PART 2 – PRODUCTS

2.01 EQUIPMENT AND FACILITIES

A. Furnish all tools, equipment, devices, appurtenances, facilities, and services for the construction and removal of excavation support systems as indicated or required.

2.02 MATERIALS

A. General: Materials shall be new or used in good condition, free from defects that would impair strength or suitability.

B. Soldier Piles: Steel shapes of sizes indicated on working drawings.

C. Steel Sheet Piling: Continuous interlocking type, of sizes indicated on working drawings, with suitable handling holes.

D. Steel Wales and Internal Bracing: Steel shapes and sizes indicated on working drawings.

E. Timber:

1. Lagging: Heavy timber boards or planking of sizes indicated on shop drawings. Lagging boards or planking shall be secured and contained in place by soldier piles with boards inserted behind the steel flanges, on the excavation side.

2. Posts, Struts, and Walers: Heavy timber posts, beams, stringers, and planking, as required, of sizes indicated on shop drawings.

3. Preservative Treatment: Wood members required being left permanently in place shall be pressure-treated with preservative material in accordance with AWPA C3.

F. Concrete: Conform to Section 03 11 00 – Concrete Forming, Section 03 20 00 – Concrete Reinforcing, Section 03 30 00 – Cast-In-Place Concrete, and Section 03 05 15 – Portland Cement Concrete, for requirements.

G. Tiebacks:

1. Steel Bars or Rods: ASTM A615, Grade 60, threaded steel bars or bars conforming to requirements of ASTM A722 or ASTM F432, as applicable of sizes indicated on approved shop drawings. Provide complete with header or face plates conforming to ASTM A36 where required, nuts conforming to ASTM A563, and washers conforming to ASTM F436, as indicated or required.

2. Wire Strands: Single-strand or multiple-strand galvanized steel wire conforming to ASTM A416 or ASTM A586, as appropriate.

3. Grout: Pumpable concrete, with minimum compressive strength at 28 days of 4,000 psi. Concrete mix shall contain 6.5 94-pound sacks of cement per cubic yard minimum. Aggregate size shall be commensurate with the space being filled. Comply with requirements of Section 03 05 15 – Portland Cement Concrete, as applicable.

2.03 SOIL ANCHORS

A. Product Standards: Comply with applicable requirements of PTI Post-Tensioning Manual, Chapter 4, Article 4.5, "Soil Anchors." Provide soil anchors complete with stressing anchorage and bearing plates, sheathing and pre-stressing steel, grout and grout tube (if required), and required drilling equipment.

B. Bars: ASTM A722 deformed pre-stress threadbars, with a minimum ultimate tensile strength of 150 ksi.

C. Wire Strand: ASTM A416, Grade 270, low-relaxation, seven-wire stress relieved strand, with ultimate tensile strength of 270 ksi.

D. Anchorage Grout: Portland cement, aggregate, water, and a manufactured non-corrosive expansive admixture, of suitable aggregate size and consistency for pressure grouting.

Grout shall develop a minimum compressive strength at 28 days of 4,000 psi. The Contractor may substitute a high-strength, non-shrink, non-metallic cementitious grout conforming to applicable requirements of Section 03 60 00 – Grouting.

2.04 SOIL NAILING

A. Steel Bars: ASTM A615, Grade 60, threaded, deformed steel bars of sizes indicated on approved shop drawings. Provide complete with steel face plates, nuts, and washers as specified herein for tiebacks. Steel face plates shall engage the shotcrete reinforcement.

B. Concrete Reinforcement: Reinforcing steel bars and welded wire fabric shall conform to the applicable requirements of Section 03 20 00 – Concrete Reinforcing.

2.05 SECANT WALL SYSTEM

A. Structural steel for Soldier Piles: ASTM A690/A690M H-piles or ASTM A36/36M wide flange beams or H-beams, as applicable.

B. Cement Grout: Two sacks of ASTM C150, Type I, II or III cement per cubic yard of grout, combined with ASTM C33 fine aggregate, to provide a flowable filler mix.

C. Steel Casings: Provide temporary drill casings where required to prevent caving of unstable soils.

PART 3 – EXECUTION

3.01 CONTRACTOR'S RESPONSIBILITY

A. General:

1. Assess extent of excavation support that will be required in the Work including use of side slope methods, sheeting, and bracing.

2. Prior to commencing Work, examine Design Plans and these Specifications, inspect site, and consult available record drawings of existing conditions including utilities for conditions and limitations that may influence the Work required by this Section.

3. Perform the Work in conformance with applicable laws, codes, ordinances and regulations of local authorities, and furnish all required Design Plans for obtaining permits.

4. Obtain necessary permits and approvals for excavation support systems adjacent to live rail operations or existing structures.

5. Remove shoring after completion of construction.

B. Stability of Excavations:

1. Maintain safe and stable excavations during execution of the Work. Employ side slope methods, bracing, and sheeting to maintain integrity of excavations.

2. Sheeting and bracing shall be provided by the Contractor where side slope methods are not possible due to space restrictions or nature of material excavated.

3. Where sides of excavations are sloped, angle of slopes shall not be steeper than allowed by codes and as recommended in the geotechnical reports, whichever is the most stringent.

4. Sides and slopes of excavations shall be maintained in safe condition until backfilling is completed.

5. Where the Contractor elects to slope sides of excavations, backfill of over-excavated areas shall be made in the same manner specified for adjacent excavated area. All additional backfill required shall be performed at the Contractor's expense.

6. Work shall be performed "in the dry" and slopes shall be protected from erosion.

C. Sheeting and Bracing:

1. Sheeting, bracing and other temporary protective work shall be provided wherever necessary for safety, to protect adjacent structures, or to prevent encroachment into adjoining property.

2. Where required for safety, governing laws or as directed by HART, temporary sheeting shall be left in place at no extra cost to HART. In such instances, remove original braces and re-brace sheeting against structure as approved by HART. Sheeting shall be cut off at elevations as directed by HART.

3.02 DETECTION OF MOVEMENT

A. For each existing structure or facility within a zone of influence extending upward from the bottom of the excavation on a slope of 2 horizontal to 1 vertical, install surface control points on each footing, foundation, wall, or other feature to be monitored. Settlement detection devices shall be capable of being read to an accuracy of 0.005 foot.

B. Take and record 3 readings not less than 2 weeks prior to the start of work to establish a baseline and thereafter not less than once per week during performance of the Work. Notify HART, and take immediate remedial action if movement of the existing structure occurs during performance of the Work. Notify Engineer when movements exceed 1/2 inch vertically or horizontally. Work shall not proceed until responsible Engineer has assessed the performance of the system and both HART and coordination has occurred with the affected adjacent property Owner.

C. Upon completion of the Work, take weekly readings of the measurement points for a period of 4 weeks or longer if movement persists, and report the results to HART.

3.03 INSTALLATION REQUIREMENTS

A. Install excavation support systems for safety and preservation of existing improvements. Excavation support systems consist of structures designed by the Contractor to support the various excavations.

B. Dewatering system, if any, shall be installed and operational for at least 1 week prior to the start of excavations.

C. Required monitoring instrumentation shall have been installed and baseline readings established before the start of excavation.

D. Welding shall conform to applicable requirements of AWS D1.1.

E. No part of the excavation support systems that will remain permanently in place shall be placed or allowed to deflect within the limits of permanent structures.

F. Do not use combustible waste or similar material for packing or soil retention in excavations.

3.04 SOLDIER PILING

A. Schedule excavation, installation of steel soldier piles, and placement of concrete encasement so that each excavated shaft is placed within 12 hours after excavation of pile. Place steel soldier pile and concrete immediately after excavation bottom is inspected.

B. Do not allow vibration or excessive wheel loads within the immediate vicinity of a pile. Maintain shaft excavation stability at all times.

C. Determine the pile installation sequence, and make no pile excavation within a clear distance of 24 feet from an open pile shaft or within a clear distance of 12 feet from a pile that had its concrete encasement in place for less than 7 days.

D. Excavation for Soldier Piles:

1. General: Drill the prebored holes into soil and rock to the diameter and minimum depths as shown on the shop drawings. For piles requiring a rock socket, increase the depth of the bored holes as required by field conditions so that a competent, non-yielding foundation socket for piles is ensured.

2. Drilling:
   a. The driller shall observe the drilling rate and resistance as the boring of each hole is advanced, and shall record the relative drilling rate.
   b. Evaluate the capability of the pile-embedded length to support the lateral and vertical wall loads, and increase the embedment length as required to ensure that a competent non-yielding foundation support is developed.

3. Temporary Casing:
   a. The bored holes will require casing through soil to prevent collapse of overburden, control seepage water, and provide safe access for inspectors.
   b. Install temporary casing sufficient to withstand handling stresses, concrete pressure, and surrounding earth and water pressures.
   c. The casing shall remain in place through the cleaning and inspection operations of the prebored holes, and shall be withdrawn as the concrete is placed.
   d. Begin extraction of casing only after sufficient concrete has been placed in the shaft to achieve a minimum height differential, between the bottom of the casing and the top of concrete of 5 feet. Maintain the differential until the concrete achieves finish elevation.

4. Groundwater Control:
   a. Immediately notify HART when groundwater is encountered.
   b. In the event that groundwater is encountered during excavation operations, pumping of water from the pile excavation will be permitted during construction, provided that the groundwater does not flow into the excavation rapidly enough to carry particles of soil or result in caving of excavation walls, bottom heaving, or ground settlement.

c. If groundwater inclusion endangers the security of the excavation or adjacent property or structures, or exceeds reasonable pumping capacity, take such groundwater control measures as may be required in accordance with applicable regulations.

5. Cleaning and Inspection of Prebored Holes:

a. After the holes have been bored to the proper depth, remove loose or broken rock, earth, or debris, including water, from the bottom and sides of the hole. Bottom surfaces shall be flat and level.

b. Measure and make a visual inspection of bored holes and determine that the bored holes have been drilled to a sufficient depth to ensure a competent non-yielding foundation.

c. Provide all necessary assistance and safety equipment to enable HART to examine the bottom of the hole. Such measures shall include but shall not be limited to chair hoist, radio communications, lighting, ventilation, and auxiliary safety line.

d. Provide gas testing equipment, ventilation equipment, protective cage, and other safety equipment called for by law for inspection and testing of drilled piles, and protect workers during operations necessitating shaft entry.

e. Check each drilled pile for toxic and explosive gases prior to personnel entering. If gas is found, ventilate with forced air until safe for entry.

E. Placement of Steel Soldier Pile:

1. For soldier piles requiring tieback anchors, cut openings in the soldier piles to accommodate installation of the tiebacks and attach steel reinforcing plates at the tieback opening, as shown on the shop drawings. Make all cuts and plate attachments in the shop prior to application of the pile coating.

2. Place the steel soldier pile in the prebored holes to the lengths shown on the shop drawings.

3. Place the steel soldier piles and maintain in the center of the prebored hole using centering devices. Align the flange of the steel core member parallel to the future excavation line.

4. Furnish and install the steel soldier piles full length. Do not use splices unless otherwise approved by HART because of increased depth of the bored hole.

5. Remove steel soldier piles damaged during transportation, handling or installation which cannot be rebuilt, extended, or encased, or which do not meet these Specifications after being placed. Place another steel soldier pile at the required location.

F. Cutting Off Steel Soldier Piles:

1. For pile installation where there is a shorter depth of embedment than shown on the shop drawings or where a longer pile than required was furnished, cut off the pile to the length required.

2. Make the cut at the location necessary to maintain the tieback openings at the levels shown on the shop drawings.

3. Make all cuts perpendicular to the axis of the pile.

4. Remove cutoff sections of steel soldier piles from the site and suitably disposed of them.

G. Rebuilding or Extending Steel Soldier Piles:

1. Extend the soldier pile installations where the depth of the prebored holes must be extended beyond the depth shown on the shop drawings to obtain a non-yielding foundation for the pile, and where the length of the furnished pile is inadequate for the deepened hole.

2. The length of the extension shall be necessary to extend the soldier pile to the bottom of the prebored hole, while maintaining the tieback openings at the levels shown on the shop drawings.

3. The extensions shall be of the same section size and weight as the soldier pile to which it is spliced.

4. Splicing details shall be submitted to HART.

H. Placement of Concrete Encasement:

1. Encase steel soldier piles with concrete as shown on the shop drawings.

2. Place the steel soldier piles and concrete encasement immediately after the bored hole has been inspected, provided that the condition at the bottom of the hole is acceptable.

3. Place concrete encasement in accordance with Section 03 30 00 – Cast-In-Place Concrete, and the following requirements:
   a. Place concrete in dry excavations whenever practicable. Use all practicable means to obtain a dry excavation before and during concreting.
   b. Concrete for dry excavations shall be placed by free-fall methods. Place concrete equally around the steel soldier pile. Place concrete in each pile continuously to the top elevation.
   c. If water accumulates in the prebored holes after cleaning and inspection, prior to concrete encasement, remove water by approved methods, or alternatively place the concrete at the bottom of the hole below the accumulated water using tremie methods. Removal of accumulated water or placement of concrete shall be by tremie methods.
   d. Soldier pile excavations shall be considered “wet” and shall require concreting using the tremie method when the groundwater infiltration rate is greater than 1/4-inch vertical rise in hole per minute.
   e. Except for concreting by the tremie method, the total height of water in the bottom of the excavation shall not exceed 2 inches at the time of concrete placement.
   f. Remove the temporary casing as specified in Article 3.04D.3 herein. During extraction of the casing, prevent upward movement of the steel soldier pile.
   g. Vibrate only the top 5 feet of concrete. The top 5 feet of concrete shall be vibrated after the casing has been withdrawn.

I. Soldier Pile Logs: Keep a record for each soldier pile installed. Include as a minimum:

1. Pile number, location, final top and bottom elevations of steel soldier pile and cast-in-place concrete encasement
2. Top elevation of weathered rock, and of sound rock
3. Final location of pile axis, and variation from design location
4. Pile plumbness
5. Pile diameter, and variations in diameter with depth
6. Date and time of start and completion of pile shaft excavation and concreting
7. Elevation of water table during excavation
8. Size of steel soldier pile, and location of splices
9. Concreting data including design mix, volume placed, and method of placement
10. Other documentation as may be dictated by construction conditions, including problems encountered and delays

3.05 SHEET PILING

A. Drive sheet piles in plumb position, with each pile interlocked with adjoining pile for its entire length so as to form a continuous diaphragm throughout the length of each run of wall. Drive to depth indicated. Pre-drill or pre-excavate, as required based on the subsurface conditions, prior to installing sheet piles.

B. Provide driving method so that interlocking members can be extracted, if required, without injury to adjacent fills.

C. Do not drive piles within 100 feet of concrete less than 7 days old.

D. Methods of driving, cutting and splicing shall conform with approved shop drawings and procedures.

3.06 BRACING AND TIEBACKS

A. Requirements: Provide walers, struts, rakers, shores, and tiebacks as necessary to support excavation faces retained by the excavation support systems.

B. Internal Bracing:

1. Provide walers where required at each level bracing. As excavation proceeds, place walers on open face of support system wall. Wedge, drypack, and otherwise provide tight bearing between walers and support system wall, with ample bearing areas to provide uniform transfer of loads.
2. Provide struts with intermediate bracing as needed to enable struts to carry the design load without distortion or buckling.
3. Provide diagonal bracing as needed for stability of the system.

4. Include web stiffeners, plates, angles or bracing as needed to prevent rotation, crippling, or buckling of connections and points of bearing between structural members. Allow for eccentricities caused by field fabrication and assembly.

5. Install and maintain internal bracing support members in tight contact with each other and with the surface being supported.

6. Design internal bracing support members for maximum loads that may occur during excavation and removal stages.

C. Tiebacks:

1. Provide tieback anchorage system as indicated or required. Install tieback system in accordance with approved shop drawings.

2. Tiebacks shall not extend beyond the right-of-way and easement properties.

3. Install manufactured tieback or anchorage systems in accordance with the manufacturer's instructions.

4. Stress installed tiebacks to proof loads indicated on the approved shop drawings. Tiebacks that lose more than 5 percent of applied proof loads or deflect more than 6 inches shall be reinforced and strengthened to withstand applied proof loads.

5. Apply proof loads as herein specified, and provide means to measure each load application within an accuracy of plus or minus 5 percent.

6. After load test approval, reduce tieback proof load to the design load, and encase tieback anchorage and bars or rods in grout, lean concrete, or compacted backfill, as indicated, maintaining the design load until tiebacks are fixed in place. Provide a method of fixation that will limit the load loss to not more than 5 percent of the design load in the transfer of loads from the jacks to the support system.

D. Proof Loading:

1. Perform proof loading of internal bracing members and tiebacks, including struts, shores and similar members. Employ procedures that will produce uniform loading on bracing members and tiebacks without inducing eccentricities or overstressing and distortion.

2. Perform and accomplish proof loading by approved load testing or jacking procedures. Submit detailed shop drawings of proposed load testing and jacking procedures.

3. Apply proof loads as soon as possible after bracing and tiebacks and with application of proof loading. Provide steel shims and wedges, welded or bolted in place to help maintain the proof-loading force on the bracing and tiebacks after release of load-testing pressures.

E. Creep Tests on Tiebacks:

1. Load test tiebacks for creep at each level of support in the excavation, at the first installation on each side of the excavation, at horizontal intervals not exceeding 500 feet, and wherever a significant change occurs in the soil in which the tiebacks are anchored.

2. Perform a 24-hour load test on one out of each 100 tieback anchors. Perform tests by applying the proof load and maintaining it constant for 24 hours.

3. Keep records of axial movement with incremental applications of the load, and the amount and time of load fall-off with no pumping of the jack or axial movement during the 24-hour period that the proof load on the anchor is maintained.

4. Redesign the tieback system to attain specified limits if, during the 24-hour period the axial deformation of the tieback system exceeds 0.20 inch or the decrease in jack pressure without pumping is more than 5 percent after correcting for temperature changes.

3.07 SOIL ANCHORS

A. Requirements: Provide soil anchors for all locations indicated on the approved shop drawings. Soil anchors may be used for tiebacks specified in Article 3.06 herein, as appropriate.

B. Installation and testing standards: Soil anchors shall be installed and tested in accordance with applicable requirements of PTI Post-Tensioning Manual, Chapter 4, Article 4.5, "Soil Anchors."

C. Installation:

1. Angle tolerances shall be within 1 degree of those indicated on approved shop drawings.

2. Deviation from planned orientation shall be no more than 2 inches in 10 feet.

3. Drilling of anchor holes shall be by a proven system that utilizes a hollow stem auger or other approved method as appropriate for the soil conditions.

4. Clean or redrill holes that cave, slough, or otherwise do not provide suitable anchorage.

5. Use spacers or sheathing to ensure that anchor tendons do not contact wall of drill hole. Maintain at least 2 inches of grout space around each tendon.

6. Do not extend adjustment screws on cross braces or centerhole jacks used for loading soil anchors beyond manufacturer's recommendations or two-thirds of threaded length, whichever is more restrictive.

7. Each jack used to stress tendons shall be equipped with a pressure gage for determining the jacking load applied to the tendon. Pressure gages shall have an accurate reading dial at least 4 inches in diameter or a clearly readable digital display.

8. The tensioning process shall be conducted so that the tension being applied and the elongation of the pre-stressing steel may be measured at all times. A record shall be kept of gage pressures, elongations, and anchorage seating values and shall be submitted for record.

9. Grout shall be injected at the lowest part of the anchor. Grout may be placed through the stem of the auger, through grout hoses, tubes or pipes. Non-rigid hoses shall be attached to the lower end of the anchor with a break-away attachment that permits the

hose to be removed as grout is placed. Pump pressure shall be maintained as grout hose or tube is removed.

10. Locate soil anchors so as not to damage or destroy active utility facilities. Deviation shall obligate the Contractor to repair, replace, or otherwise restore such damage to the satisfaction of the utility owner.

D. Tests: Test each soil anchor after being grouted for its entire bond length and after grout has attained a minimum compressive strength of 3000 psi. One anchor or 1 percent of anchors in a wall section, whichever is greater, shall be designated as a performance test anchor. Performance test anchors shall be installed and tested prior to placement of production anchors. All production anchors shall be proof tested.

3.08 SOIL NAILING

A. Installation of Nails:

1. Soil nails shall be installed at locations and to the depths indicated on approved shop drawings, employing a drilling and grouting method appropriate for the soil in which they are to be installed.

2. Dewatering shall be performed in advance of soil nailing work to facilitate soil nailing in dry soil conditions.

3. Provide nail length and nail diameter necessary to develop the load capacity and to satisfy testing acceptance criteria for the required design load, but not less that the lengths and diameters indicated on approved shop drawings.

4. An initial cut in the soil shall be made to a depth governed by the ability of the soil to stand unsupported, but not greater than the required vertical spacing of the soil nails.

5. Drill hoes for soil nails at locations indicated on approved shop drawings, with the actual locations within 6 inches of the indicated location. The nail angles shall be located within plus or minus 3 degrees of that indicated on approved shop drawings. Adjust dimensions to suit field conditions.

6. Core drilling, rotary drilling, percussion drilling, auger drilling, or driven casing may be employed for soil nailing. Choose drilling methods that will maintain open drill holes and which do not promote mining and loosening of the soil at the perimeter of the drill hole. Where groundwater or local seepage causes holes to cave in, revise the drilling procedure to provide continuous support of the hole.

B. Grouting:

1. Provide grouting equipment capable of continuous mixing, producing a grout of proper consistency free of lumps. Nails shall be placed in each drilled hole within 15 minutes of the grout injection.

2. Place centralizers at 10-foot intervals in the total length with the last centralizer 1 foot from the end of each nail, and ensure that not less than 1-1/2 inch of grout cover is achieved around and along the nail. Centralizers may be omitted when pressure-grouting through hollow stem augers with a stiff grout mixture of 8 inches or less slump.

3. Inject or pump grout at the lowest point of the drill hole. Pump grout through grout tubes, casing, hollow-stems augers, or drill rods, such that the hole is filled free of air voids with the grout filling the hole progressively from bottom to top. Inject or pump grout until the hole is completely filled and clean grout is seen to be running from the top of the hole.

4. Subsequent excavation shall not proceed until the grout has attained a minimum compressive strength of 1,000 psi.

C. Tests:

1. Provide a complete proof loading program. At least one nail per 100 linear feet of wall at each excavation level shall be tested. In addition, designated performance or sacrificial nails shall be tested to failure.

2. Soil nails shall not be tested until the anchorage grout has attained a minimum compressive strength of 3,000 psi.

3. Apply an alignment load (plus or minus 10 percent of the design load) and record the nail position.

4. Apply and increase the soil nail load in progressive steps of 25, 50, and 75 percent of the test load, and record the nail movement at each step. Maintain each incremental load for a minimum of one minute.

5. Bring the soil load up to 100 percent test load and after movement has stopped, maintain the load for five minutes. The time period may need to be adjusted based on the soil nail performance.

6. The following are acceptable nail movements:
   a. Total nail deformation shall be limited to 1 inch.
   b. Nail movement during the 5-minute 100-percent test load shall be limited to 1/10 of an inch.

7. Reduce soil nail load to zero and tighten nut.

8. Based on these test results, adjust soil nail hole diameter, nail lengths, and spacings as required.

3.09 SECANT WALLS

A. Design and construct secant walls as indicated in the Design Plans or required. Drill beam holes and intersecting pier holes in sequence selected. Provide arched configuration of piers between beams. Provide temporary casings if necessary to prevent cave-ins of unstable soils. Set and align H-beams where they occur. Place toe concrete in beam holes to within 6 inches of the design subgrade. Fill balance of beam holes and intersecting pier holes with a cement grout filter mix. Concrete and cement grout may be end-dumped, provided drill holes remain stable during placement.

3.10 SITE CONDITIONS

A. Provision for Contingencies:

1. Monitor performance of components of excavation support systems, both for vertical and horizontal movement, at regular intervals.

2. Provide and secure approval for a contingency plan or alternative procedures to be implemented in the event of an unfavorable performance of the system.

3. Have materials and equipment available to implement the approved contingency plan.

B. Existing Utilities:

1. Proceed with caution in areas of utility facilities and structures. Expose existing utilities by hand excavation or by other method acceptable to the utility owner.

2. If existing utility facilities and structures interfere with proposed method of excavation support, modify or relocate such facilities in accordance with the utility owner's recommendations or modify the excavation support systems.

3.11 REMOVAL OF EXCAVATION SUPPORT SYSTEMS

A. If removal is required wholly or in part, perform such removal in a manner that will not disturb or damage adjacent structures, construction, or utilities. Fill voids immediately with lean concrete or with approved backfill compacted to the appropriate relative compaction for the location.

B. Leave excavation support systems in place until the concrete and structures to receive the transferred loading from the removed support system have reached 100 percent of the specified compressive strength at 28 days. Demonstrate by methods acceptable to City that the concrete has reached the specified strength before load transfer from the support system to the concrete structure may be performed. For pile caps and base slabs, removal of bracing shall be after the concrete has attained a minimum 7 days after last concrete has been placed.

C. Secant walls and soil-mix walls shall be left in place.

D. Remove from the site all elements of excavation support systems 2 feet below the level of surfaces to be constructed or restored.

E. Repair damage to new or existing structures resulting from removal of excavation support systems.

3.12 RESTORATION

A. Restore existing structures to conditions equivalent to those existing prior to the start of work, including repair of settlement related damage.

END OF SECTION

SECTION 31 62 00
DRIVEN PILES

PART 1 – GENERAL

1.01 SUMMARY

A. Description: This Section describes the requirements for constructing driven piles.

B. Section Includes:

1. Pile Types
2. Determination of Pile Length
3. Indicator Piles and Test Piles
4. Pile Load Tests for Axial Compression and Tension Capacity
5. Dynamic Pile Testing
6. Installation of Piles

C. Related Sections:

1. Section 03 05 15 – Portland Cement Concrete
2. Section 03 20 00 – Concrete Reinforcing
3. Section 03 30 00 – Cast-in-Place Concrete
4. Section 05 05 23 – Metal Fastenings

1.02 DEFINITIONS

A. Indicator Pile: An individual production pile that is driven without use of follower to substantiate capacity of associated production piles driven with follower.

B. Production Piles: Piles that are purchased and delivered for incorporation in the permanent structure.

C. Reaction Pile: An individual pile that provides the reaction load required to perform the load test on a test pile.

D. Site is defined per AASHTO LRFD Section 10.5.5.2.3: "A site shall be defined as a project site, or portion of it, where the subsurface conditions can be characterized as geologically similar in terms of subsurface stratification, i.e., sequence, thickness, and geologic history of strata, the engineering properties of the strata and the groundwater conditions." This definition is modified herein to read "contiguous portion" and not exceeding 1,000 feet in length.

E. Test Pile: An individual pile that is load tested and observed under static axial compression or tension load, and under dynamic load tests.

1.03 REFERENCES

A. American Association of State Highway and Transportation Officials (AASHTO):

1. AASHTO Publication LRFD Bridge Design Specifications, Customary U.S. Units, 4th Edition, 2007, with 2008 Interim Revisions

B. ASTM International (ASTM):

1. ASTM A36 Standard Specification for Carbon Structural Steel
2. ASTM A252 Standard Specification for Welded and Seamless Steel Pipe Piles
3. ASTM A690 Standard Specification for High-Strength Low-Alloy Nickel, Copper, Phosphorus Steel H-Piles and Sheet Piling with Atmospheric Corrosion Resistance for Use in Marine Environments
4. ASTM A760/A760M-09 Standard Specification for Corrugated Steel Pipe, Metallic-Coated for Sewers and Drains
5. ASTM A929 Standard Specification for Steel Sheet, Metallic-Coated by the Hot-Dip Process for Corrugated Steel Pipe
6. ASTM D1143 Standard Test Methods for Deep Foundations Under Static Axial Compressive Load
7. ASTM D3689 Standard Test Methods for Deep Foundations Under Static Axial Tensile Load
8. ASTM D4945 Standard Test Method for High-Strain Dynamic Testing of Piles

C. American Welding Society (AWS):

1. ANSI/AWS D1.1 Structural Welding Code – Steel

D. State of Hawaii Department of Transportation Standard Specifications (HSS):

1. City and County of Honolulu/Federal Projects Special Provision to Section 102, Subsection 102.05, June 9, 2006
2. HSS Section 505 Piling

1.04 SUBMITTALS

A. General:

1. Refer to Section 7.7 – Submittal Procedures, and Section 7.8 – Shop Drawings, Product Data, and Samples, for submittal requirements and procedures.
2. List of equipment, methods, and procedures for the manufacture, transportation, storage, handling, lifting, driving, cut off, build up, splicing, and connections of piles
3. Method to be used to maintain alignment or to realign piles.
4. Drawing showing the identification number for each pile to be driven.

5. Load Testing Plan: Description of and supporting calculations for execution of the required load tests signed and sealed by a Hawaii registered professional engineer..
   a. Description of instrumentation that will be used and its arrangement
   b. Design calculations for the entire reaction frame and reaction piles, if used.
   c. Description of jacking arrangement that will be used.
   d. Certified calibration and manufacturers specifications for any load cells, strain gauges, dial gauges, electronic readouts, and survey instrumentation that will be used.

B. Shop Drawings: Submit shop drawings of pile types as follows:

1. Steel H-piles or open-ended or closed-ended pipe piles, driven. Show typical details of size, weight, splices, tip construction, and welding of splice connection.

2. Concrete-filled steel pipe piles, consisting of cast-in-place concrete in constant-diameter, driven, steel pipe shells. Show typical details of sizes, configuration, tip construction, and welding of section connection, and class of concrete fill.

3. Concrete-filled corrugated steel pipe piles, consisting of cast-in-place concrete in constant-diameter, mandrel-driven, corrugated steel pipe shells. Show typical details of sizes, configurations, tip construction, and welding of section connections, and class of concrete fill.

4. Concrete-filled corrugated steel pipe piles, consisting of cast-in-place concrete in tapered or step-tapered diameter, mandrel-driven, corrugated steel pipe shells. Show typical details of sizes, configurations, tip construction, and welding of section connections, and class of concrete fill.

5. Templates: Where templates are to be used for pile driving, submit shop drawings detailing the proposed template.

6. Test Piles: Shop drawings in support of Load Testing Plan requirements.

C. Pile Driving Sequential Layout:

1. Submit layout drawings showing the proposed sequence of driving the piles.

2. On the sequential layout, show each pile by identification, its driving sequence number, type, size, load bearing capacity, and pile tip elevation as planned.

3. Submit a Pile Numbering Plan that clearly identifies and numbers each pile for reference.

D. Pile Driving Record: Maintain a pile driving record during pile driving and submit it upon completion of each day's pile driving. On the record, indicate for each pile driven, the information specified in Article 1.04C herein, and the following: size and depth of predrilling; type and rating of driving equipment, cushioning used, overall-blow count per foot and number of blows per inch penetration for the last 12 inches, stroke of diesel hammer for entire length of driving, energy of hydraulic hammer for entire length of driving, and unusual conditions encountered during driving. Also, record start and end time of pile installation and times for any interruptions to driving. After completion of pile driving, provide the design engineer and HART with survey report showing actual locations of the pile heads at cutoff elevations and batter of piles.

1. Submit a certified copy of the pile driving record to HART for record purposes.

E. Equipment Review and Drawings:

1. Submit complete list of the equipment proposed for use, including a description of the characteristics of each piece of driving equipment.
   a. HART will review the proposed driving equipment, accessories, and methods as a check of the adequacy of the equipment and methods for the conditions expected to be encountered.
   b. Should the equipment used by the Contractor prove to be inadequate to drive the scheduled types of piles at the locations indicated, or should the use of accessories show damage to the piles, or should it be found that the progress schedule cannot be maintained because of inadequate equipment or methods, replace or use different types of equipment and accessories, or both, as appropriate for the conditions encountered.

2. Submit shop drawings of driving accessories showing compatibility with the size, configuration, handling, and driving requirements of each type of pile indicated.

3. Submit shop drawings showing the methods and equipment proposed for loading test piles.

4. Submit copies of calibration tests, by an approved calibration agency, for all equipment, including strain gauges, transducers, and dial gauges, used for pile testing, prior to start of load tests.

5. Submit reports of axial compression and tension load tests, and dynamic load tests, within 5 days following completion of each load test.

F. Certificates:

1. Submit evidence that he/she has been engaged in the successful installation of driven piles for at least 5 years and that his/her crane operators or "key men," who give directions to the crane operators, have at least 2 years of experience in the successful installation of driven piles.

2. Furnish records of past successful experience in the performance of this type of work and submit to HART for review including a description of the materials used and methods of operations. The information furnished shall demonstrate that the finished piles complied, in all respects, with the quality and properties required by these Specifications.

3. Welding Certificates – Copies of certificates indicating compliance of welding procedures and qualified welding personnel with requirements in Article 1.05 herein.

4. Submit evidence of qualifications of the specialty independent company employed by the Contractor to perform Pile Load Test and Dynamic Pile Testing in accordance with Articles 3.04 and 3.05 herein.

G. Closeout Records:

1. Submit two copies of the placement record of each pile to HART no later than 24 hours after placement of the said pile.

2. Record Documents shall identify the project, the Contractor, show pile location and number, pile capacity, type and size of equipment used, pile dimension, elevation of

the pile tip, elevation of the top of pile, ground elevation, pile deviations, and any unusual occurrences during pile placement.

3. During construction, keep records showing pile number, location and difficulties or deviation from plans for each pile that is placed. Make these records available to HART during the progress of the work; and submit one copy to HART same day the pile is placed

1.05 QUALITY ASSURANCE

A. General: Refer to Section 7.10 – Quality Assurance, for quality requirements and procedures.

B. Pile Requirements: General and specific pile requirements shall comply with HSS Subsection 505 – Piling.

C. Installation Tolerances: Reference HSS Subsection 505.03 (H) (5) – Accuracy of Driving.

D. Piles delivered to the site that are cracked, bowed, chipped, deformed, under size, or that break under driving stresses shall be rejected. Remove such piles from the site and replace with sound piles. Piles broken under driving stresses may be cut off and left in place if approved by HART for the location.

E. Welding and welders' qualifications shall conform to the applicable requirements of Section 05 05 23 – Metal Fastenings.

F. Perform wave equation analyses to assess the proposed pile driving equipment for the pile loads and existing ground conditions, using the acceptability criteria that the pile capacity must be achieved at driving resistance between three and ten blows per inch, and pile stresses must remain within allowable values in accordance with HSS Subsection 505.03-2.

1.06 EXISTING SITE CONDITIONS

A. Adhere to HSS Subsection 102.05 – Examination of Contract and Site Work.

B. Existing Utilities: Locate existing underground utilities before installation of piles. If utilities are to remain in place, provide protection from damage during pile installation operations.

1. Should uncharted or incorrectly charted piping or other utilities be encountered during excavation, notify HART immediately. Cooperate with HART and utility companies in keeping the services and facilities in operation. Repair damaged utilities to satisfaction of the utility owner.

C. Existing Site Conditions:

1. Reference Contract Documents, including Geotechnical Baseline Report (GBR) (if included in Contract Documents for this Contract).

2. Subsurface Investigations: Geotechnical Data Report (GDR), or geotechnical report provided by HART for this Contract.

3. Soil or rock samples available for the Contractor's inspection by request to HART.

D. Protection:

1. Protect nearby structures from damage caused by pile operations.
2. Examine foundation drawings for existing structures.
3. Plan and execute operations in a manner that will prevent damage to the existing foundations.

PART 2 – PRODUCTS

2.01 PILES

A. Steel H-piles conforming to ASTM A690, of size and type indicated. Steel plates and welding shall conform to the requirements of Section 05 05 23 – Metal Fastenings.

B. Pipe Piles:

1. Shell: Steel pipe conforming to ASTM A252, Grade 2, welded or seamless, of diameter and shell thickness indicated. Steel plates and welding shall conform to the requirements of Section 05 05 23 – Metal Fastenings. For closed end pipe piles, end plates shall be structurally designed and adequately connected to the steel pipe to resist predicted driving stresses at the pile tip during installation.
2. Concrete Reinforcement: Conform to the requirements of Section 03 20 00 – Concrete Reinforcing, of grades and sizes indicated.
3. Concrete: Conform to the requirements of Section 03 30 00 – Cast-in-Place Concrete, and Section 03 05 15 – Portland Cement Concrete. Provide minimum Class 3000 concrete, unless otherwise indicated.

C. Corrugated Pipe Piles:

1. Shells:
   a. Corrugated constant-diameter cylindrical pipe conforming to ASTM A760, of diameter and sizes indicated.
   b. Tapered or step-tapered corrugated steel shell fabricated of corrugated sheet conforming to ASTM A444 or pipe sections conforming to ASTM A760 of progressively larger or smaller sizes to meet indicated requirements.
   c. Shell Thicknesses: Provide thickness or gage of metal and shell reinforcement of sufficient strength and rigidity to permit installation, and to prevent distortion caused by soil pressures after removal of the mandrel.
   d. Tip: ASTM A36 steel plate, of thickness as indicated, welded to shell.
2. Concrete Reinforcement: Conform to the requirements of Section 03 20 00 – Concrete Reinforcing, of grades and sizes indicated.
3. Concrete: Conform to the requirements of Section 03 30 00 – Cast-in-Place Concrete, and Section 03 05 15 – Portland Cement Concrete. Provide minimum Class 4000 1-inch concrete, unless otherwise indicated.

D. Reinforced Precast, non-prestressed concrete piles, of sizes and requirements indicated, and conforming to the requirements of HSS Subsection 505.02(B) – Reinforced Precast Non-Prestressed Concrete Piles: minimum concrete compressive strength of 5,000 psi.

2.02 SOURCE QUALITY CONTROL

A. Piles delivered to the site that are cracked, bowed, chipped, deformed, undersized, or that break or deform under driving stresses, will be rejected. Remove such piles from the site and replace with sound piles.

PART 3 – EXECUTION

3.01 PILE TYPES

A. Piles shall be of the type and dimensions shown on the Design Plans. Piles shall be driven to the required capacity and penetration, as indicated.

3.02 DETERMINATION OF PILE LENGTH

A. Piles shall be of such lengths as required to develop the specified capacity, to obtain the required penetration, and to extend into the pile cap or footing block as shown on the Design Plans.

B. The Design Plans show the required type of piling and size, the required compression and tension capacity, the minimum penetration, and the estimated pile tip elevation. Estimated tip elevations are approximate, based upon subsurface explorations, and are shown only to indicate the required lengths of indicator piles and test piles.

C. Lengths of production piles will be determined by the responsible geotechnical engineer from the data obtained from the driving of and the load-testing of test piles. The design penetrations are subject to HART review and acceptance as conforming to Contract Document requirements.

3.03 INDICATOR PILES AND TEST PILES

A. Based upon the information shown, order and drive the indicator piles and test piles. The length of test piles and indicator piles shall be 15 feet longer than the estimated length of production piles in order to provide for variation in soil conditions. Compression and tension capacities of the test piles shall be determined by methods hereinafter specified.

B. Excavate the ground at test pile to the elevation of the bottom of the pile cap footing before the pile is driven, or the Contractor may employ isolation casing to eliminate friction above the design footing level.

C. Test piles shall be driven at the locations and to the elevation shown on the Design Plans and approved shop drawings or as otherwise directed by HART.

1. Piles shall be driven with impact hammers, unless otherwise shown.

2. Pipe piles sections that will not be relied upon for frictional support, e.g. skin friction discounted in axial support capacity computations, may be vibrated in place.

D. “Followers” shall not be used unless accepted in writing by HART.

1. Where followers are used account for their use in wave equation analyses and dynamic testing at not increase in contract price or contract time.

2. Install indicator piles in accordance with the requirements in HSS Subsection 505.03(E) – Pile Driving Aids.

E. Driving equipment used for driving test piles shall be identical to the equipment that the Contractor proposes to use for the driving of production piles.

F. Test piles shall be driven to a hammer blow count established by the responsible geotechnical engineer at the estimated tip elevation. Test piles that do not attain the hammer blow count specified above at a depth of 1 foot above the estimated tip elevation indicated shall be handled as follows.

1. Allow test pile to "set up" for 12 to 24 hours before being re-driven. A cold hammer shall not be used for re-drive. The hammer shall be warmed up before driving begins by applying at least twenty blows to another pile.

2. As approved by the responsible geotechnical engineer and accepted by HART, the pile may be driven below the estimated tip elevation, without interruption, to obtain the required pile capacity without relying on "set-up."

G. If the specified hammer blow count is not attained on re-driving, the responsible geotechnical engineer may direct the Contractor to drive a portion or all of the remaining pile length and repeat the "set up" – re-drive procedure. Piles shall be driven to the planned grade and, when not having the hammer blow count required, shall be spliced and driven until the required capacity is obtained.

H. A record of driving test piles will be prepared by the responsible geotechnical engineer that will include the number of hammer blows per foot for the entire driven length, stroke of diesel hammer, energy of hydraulic hammer, the as-driven length of the test pile, cutoff elevation, penetration in ground, and other pertinent information. Sample pile driving data recording forms are shown for reference in Figure 31 62 00-1.

I. From the driving behavior and test pile data and the subsurface exploration data, the responsible geotechnical engineer will determine the required length of production piles. The required pile penetration depths shall take into consideration settlement criteria, potential downdrag loads, and other loading factors applicable to the Work.

J. Pursuant to pile load testing for each Site, the responsible geotechnical engineer will furnish HART with a production pile order list, which after HART review for conformance with Contract Document requirements, will be passed on to the Contractor for production pile ordering.

K. Do not order production piles until indicator and test pile data has been reviewed and pile order lengths are accepted by HART in writing.

3.04 PILE LOAD TESTS FOR AXIAL COMPRESSION AND TENSION CAPACITY

A. Perform a minimum of one axial compression and, when appropriate, one axial tension load test for each representative Site. Site is defined in Section 1.03 herein.

B. Install test piles of the same type and kind as production piles, in the locations indicated on the Design Plans or at other locations as accepted by HART.

1. Reinforce test and reaction piles for the full length to resist uplift loads

2. Install test piles vertically

C. Test piles shall not be used as production piles. Reaction piles shall not be used as production piles without prior written acceptance of HART. Either extract test piles and

reaction piles and remove from the site, or cut them off 3 feet below structures to be installed above. Holes shall be backfilled with compacted granular backfill or Controlled Low Strength Materials (CSLM) conforming to the requirements of and placed in accordance with Section 31 23 00 – Structure Excavation and Backfilling.

D. All equipment, including strain gauges, transducers, dial gauges, used for pile testing shall be calibrated within the tolerances and specifications of the manufacturer.

E. Compression load tests shall be performed in accordance with ASTM D1143, Procedure A – Quick test. Tension load testing, where required, shall be performed in accordance with ASTM D3689.

1. Commence loading of test piles no sooner than five days after installation of piles.

2. Perform compression load tests and, as required, tension load tests, to determine ultimate axial capacity of test pile. The maximum test load shall be at least 2 times the design load, or the failure load, whichever occurs first. Apply the load in increments equal to 10 percent of the maximum test load, with a constant time interval between increments of 5 minutes. Maintain the maximum test load for not less than 15 minutes, unless the shaft has failed according to the project design criteria.

3. Remove the test load in decrements equal to 25 percent of the maximum test load, with a constant time interval between increments of 5 minutes.

4. Measure displacements and rebound of the test pile to the nearest 0.01 inch.

F. Capacity:

1. For driven piling supporting structures designed in accordance with the Building Code, allowable pile capacity of the test pile is defined as 40 percent of the failure load under tension and 50 percent under compression load test conditions with adjustment for downdrag and scour as required based on the pile design.

2. For driven piling supporting structures designed in accordance with AASHTO requirements per the Contract Documents, pile capacity shall be as defined in AASHTO LRFD Bridge Design Specifications, Chapter 10.

3. For piles 24 inches or less in diameter or width, the failure load of a pile tested under axial compressive load is that load that produces a settlement at failure of the pile head equal to:

$$S_f = S + (0.15 + 0.008D)$$

Where:

S_f = Settlement at failure in inches

D = Pile diameter or width in inches

S = Elastic deformation of total unsupported pile length in inches

G. HART may require the Contractor to make additional load tests in the event that the test pile does not achieve required load capacity, shows any erratic action or otherwise questionable behavior as to be cause for suspicion as to the reliability of the pile capacity.

H. Immediately following completion of load testing, submit two copies of the test report for each test pile to the responsible engineer and HART for record purposes. Include in the test report the data required by respective ASTM standard.

3.05 DYNAMIC PILE TESTING

A. It is the Contractor's responsibility to employ and compensate a specialized dynamic testing firm. Dynamic testing is to be performed by an independent specialist from a firm with a minimum of 5 years experience in dynamic testing. The actual dynamic test shall be conducted and supervised by a Professional Engineer licensed in the State of Hawaii with at least 2 years of dynamic testing. Selection of the firm must be acceptable to HART. The independent dynamic testing firm must supply all equipment.

B. Prior to performing the dynamic test, be responsible for soil borings, installation records, concrete properties (such as strength) and details regarding the anticipated dynamic loading equipment. Perform the required wave equation analyses to determine the suitability of the proposed pile driving equipment and an acceptable range of ram drop heights so as not to cause damage in the pile during driving.

C. Take dynamic measurements during driving of all indicator piles and test piles. Perform dynamic testing on at least 5 percent of the production piles. Mark the production piles to be tested and the proposed indicator piles and test piles on the pile layout drawing submittal in accordance with Article 1.04 C – Pile Driving Sequential Layout.

D. Prior to placement in the leads, make each designated concrete pile available for taking wave speed measurements and for pre-drilling the required instrument attachment holes. Pre-driving wave speed measurements will not be required for steel piles. When wave speed measurements are made, the piling shall be in a horizontal position and not in contact with other piling.

E. Furnish the equipment, materials, and labor necessary for drilling holes in the piles for mounting the instruments. Instruments shall be attached near the head of the pile with expansion-type bolts for concrete piles or through drilled holes on steel piles.

F. Provide access to the pile for attaching instruments after the pile is placed in the leads. Provide a platform with minimum size of 4 feet by 4 feet (16 square feet) designed to be raised to the top of the pile while the pile is located in the leads.

G. Furnish electric power for the dynamic test equipment. The power supply at the outlet shall be 10 amp, 115 volt, 55-60 cycle, A.C. only. Field generators used as the power source shall be equipped with meters for monitoring voltage and frequency levels.

H. Drive the pile to the design tip elevation or other depth directed by the responsible geotechnical engineer. The stresses in the piles shall be monitored during driving with the dynamic test equipment to ensure that the values determined do not exceed the allowable values. If necessary, reduce the driving energy transmitted to the pile by using additional cushions or reducing the energy output of the hammer in order to maintain stresses below the allowable values. If non-axial driving is indicated by the dynamic test equipment measurements, immediately realign the driving system.

I. Wait up to 24 hours and, after the instruments are re-attached, re-tap the dynamic load test pile. A cold hammer shall not be used for the re-drive. The hammer shall be warmed up before re-drive begins by applying at least twenty blows to another pile. The maximum amount of penetration required during re-drive shall be 6 inches, or the maximum total

number of hammer blows required will be fifty, whichever occurs first. After re-tapping, the responsible geotechnical engineer will either accept the pile or specify additional pile penetration and testing for that dynamic load test pile. CAPWAP (CAse Pile Wave Analysis Program) analyses of dynamic pile testing data shall be performed on data obtained at the end of initial driving and at the beginning of re-drive of the driven piles.

J. The Contractor's report for each CAPWAP analysis shall include the following information: graph showing the bearing capacity versus blow count and pile stress versus blow count; simulated static load test curves for the tip and the top of the pile; evaluation of the soil parameters based on the matching of the measured and computed values of forces, velocities and displacements; and static resistance distribution along the length of the pile. All computer print-outs and graphs from the CAPWAP analysis and a typed formal report summarizing the dynamic testing results of each pile shall be submitted to HART within 10 days of the completion of each dynamic test.

3.06 INSTALLATION OF PILES

A. Provide piles of the type shown on the Design Plans and of the length determined from the Load Tests and in accordance with the list provided in Article 3.03J herein.

B. Penetration and Bearing: Drive piles to the required penetration, or to the required bearing, as determined by the responsible geotechnical engineer from Load Testing program.

1. Jetting will not be permitted unless specifically accepted in writing beforehand by HART for the location.

2. Vibratory driving of pipe piles or steel shells will not be permitted except as otherwise allowed in Article 3.03C.2 herein.

C. Predrilled Holes:

1. Where piles are to be driven through new embankment and the depth of the embankment is greater than 5 feet at the pile location, drive the pile in a hole, drilled through the embankment, of diameter not less than the greatest cross-section dimension of the pile. Before driving the pile, fill space around the pile with dry sand or pea gravel and refill after driving is completed.

2. When necessary to achieve the required penetration and when approved by HART, drill holes of diameter no greater than 90 percent of the least cross-sectional dimension of the pile at the depth being drilled, and drive the pile therein to the required penetration. Locations, depths, and types of pre-drilling shall be approved in writing by the responsible geotechnical engineer and accepted by HART in writing.

3. When, in the Contractor's opinion, a larger hole is needed to prevent damage to piles, submit substantiating data and obtain HART's written acceptance before drilling holes of larger cross-section. Holes greater than 100 percent of the cross-sectional dimension of the pile will not be permitted. HART may, at its sole discretion, require static load test(s) to verify pile capacity when predrilling depth or diameter deviates from that used during the test pile program.

D. Pile Driving:

1. Complete embankment construction, filling, and backfilling to the required elevations before starting of pile-driving operations. Unless otherwise specified, an

embankment settlement period of at least 6 months will be required before installation of piles.

2. Do not drive piles within 20 feet of concrete less than 2,000 psi or 7 days old, whichever is less stringent.

3. Drive piles at the center of the footing and progress outward.

4. Protect driven piles from damage. If necessary, provide adequate lateral support for installed individual piles to prevent excessive temporary flexural stresses or movement of the pile top out of tolerance.

5. Maintain the hammer coaxial with the pile during the driving operation by using fixed leads and suitably rigid driving cap.

6. Investigate sudden decreases in driving resistance for possible breakage of the pile. If a sudden decrease in driving resistance cannot be correlated to boring data or some incident in the driving, and if the pile cannot be inspected, such decrease in driving resistance will be cause for rejection of the pile.

7. Re-drive piles that are raised more than 1/4 inch during driving of adjacent piles, to the original tip elevation.

8. Splice piles only by methods, details and locations accepted by HART in writing.

9. Capacity and Penetration:
   a. Reference HSS Subsection 505.03(J)
   b. Pile bearing capacity by dynamic formula will not be allowed

10. Retapping/Restrike: Reference HSS Subsection 505.03(H)(7) – Retapping.

11. Cut Off and Capping:
    a. Reference HSS Subsection 505.03(K)(1) – Cutting Off and Capping Piles.
    b. Cut off piles at top elevation shown on the Design Plans.
    c. Repair piles that are damaged when cut off to the satisfaction of HART.

12. Build Up: Reference HSS Subsection 505.03(K)(1) – Build-Ups of Piles.

13. Defective Piles: Reference HSS Subsection 505.03(I) – Defective Piles

E. Steel H-Piles or Open-Ended or Close-Ended Pipe Piles:

1. Design the driving cap with grooves in the base to conform loosely to the "H" configuration of the pile. The bearing surface of the grooves shall be true, without roughness. The driving cap shall extend down the side of the pile at least 4 inches and shall be loosely attached to the hammer so that it will, at all times, rest squarely over the entire surface of the pile.

2. Make splices as indicated by electric-arc field welding in accordance with AWS D1.1 Cut off damaged portion of pile top before splicing. Take care to align the sections connected so that the axis of the pile will be straight. Adhere to the welding requirements in Section 05 05 23 – Metal Fastenings..

F. Concrete-Filled Steel Pipe Piles:

1. Protect the heads of piles from direct impact of the hammer by using an approved head block or helmet.

2. Make splices as indicated by electric-arc field welding in accordance with AWS D1.1 Cut off damaged portion of pile top before splicing. Take care to align the sections connected so that the axis of the pile will be straight. Adhere to the welding requirements in Section 05 05 23 – Metal Fastenings.

3. Remove rejected pipe pile and replace with new pipe. When rejected pipe pile cannot be removed, furnish and install replacements. Cut off abandoned pipe 3 feet below the structure, and fill the abandoned pipe with Class 3000 concrete. Backfill holes with compacted granular material.

4. Concrete shall be placed and integrity testing performed in accordance with the requirements of Section 31 63 30 – Drilled Concrete Shaft Foundations.

5. Pipe piles may be driven with open ends and the soil, rock or deleterious material adequately removed with auger or by other approved method to depth indicated to allow concrete to bond to the inside of the pipe. Inspect driven pipe shell for internal damage and misalignment and for the presence of water, and correct damaged or defective conditions to the satisfaction of HART before placement of concrete. Damage to pile or active water seepage may be justification for rejection of pile. Piles partially filled with water shall be dewatered or concrete-filled using the tremie method.

G. Concrete-Filled Constant-Diameter Corrugated Steel Pipe Piles, and Concrete-Filled Tapered or Step-Tapered-Diameter Corrugated Steel Pipe Piles.

1. Shells will be inspected for collapse, tears, splits, bends, or reduced diameter throughout their length after shells have been driven and before reinforcing steel and concrete are placed therein.

2. Provide adequate inspection equipment such as lights and CCTV/videotape equipment as required.

3. For acceptance, the pile shell shall be:
   a. Free of collapsed sections and tears.
   b. Free of water, except that a minor amount of water may be permitted if it can be absorbed by placing a suitable amount of dry sand-cement mixture in the tip of the pile, if this condition cannot be corrected in this manner then use method specified in Article 3.06F.5 herein.
   c. Visible to the bottom of the casing.

4. Remove rejected pile shells and replace with new shells. When rejected shells cannot be removed, furnish and install replacements. Cut off abandoned shells 3 feet below the structure and fill the abandoned shells with Class 4000 concrete. Backfill holes with compacted granular material.

5. Immediately prior to installing the reinforcing steel assembly, place a 1:2 sand-cement grout in bottom of pile shell to a minimum depth of 12 inches.

6. Assemble reinforcing steel as a complete unit and install in pile before starting to place concrete.

7. Concrete shall be placed and integrity testing performed in accordance with the requirements of Section 31 63 30 – Drilled Concrete Shaft Foundations.

END OF SECTION

Figure 31 62 00-1

PILE DRIVING LOG - CONTRACT NO. _____

BUILDING/STRUCTURE: _____ DATE PILE DRIVEN: _____
CONTRACTOR: _____ TYPE OF PILE: _____
PILE LOCATION: _____ PILE SIZE (BUTT/TIP): _____ LENGTH: _____
GROUND ELEVATION: _____ CUT OFF ELEVATION: _____
TIME START: _____ BATTERED/VERTICAL: _____
TIME FINISH: _____ COMPANY: _____
HAMMER TYPE: _____ INSPECTOR: _____
'DEPTH' COLUMN OF PILE DRIVING RECORD REFERENCED TO: _____

DEPTH IN FEET	BLOWS	REMARKS	DEPTH IN FEET	BLOWS	REMARKS	DEPTH IN FEET	BLOWS	REMARKS
1			41			81		
2			42			82		
3			43			83		
4			44			84		
5			45			85		
6			46			86		
7			47			87		
8			48			88		
9			49			89		
10			50			90		
11			51			91		
12			52			92		
13			53			93		
14			54			94		
15			55			95		
16			56			96		
17			57			97		
18			58			98		
19			59			99		
20			60			100		
21			61			101		
22			62			102		
23			63			103		
24			64			104		
25			65			105		
26			66			106		
27			67			107		
28			68			108		
29			69			109		
30			70			110		
31			71			111		
32			72			112		
33			73			113		
34			74			114		
35			75			115		
36			76			116		
37			77			117		
38			78			118		
39			79			119		
40			80			120		

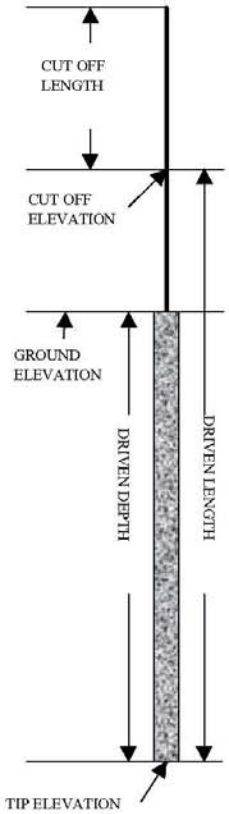

COMMENTS:

CUT OFF ELEVATION: FROM DRAWING: _____ PAYMENT:
TIP ELEVATION = GROUND ELEVATION - DRIVEN DEPTH = _____ DRIVEN LENGTH X BID PRICE = _____
DRIVEN LENGTH = CUT OFF ELEVATION - TIP ELEVATION = _____ CUT OFF LENGTH X 0.75 X BID PRICE = _____
CUT OFF LENGTH = PILE LENGTH - DRIVEN LENGTH = _____

PILE AND DRIVING EQUIPMENT DATA FORM (Imperial Units)

Project: _____

Pile Driving Contractor: _____

HAMMER

Manufacturer: _____ Model: _____

Type: _____

Rated Energy: _____ to _____ foot-lbs @ _____ to _____ ft stroke

Modifications: _____

RAM

Ram Weight: _____ lbs.

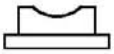

ANVIL OR BASE

Weight: _____ lbs.

STRIKER PLATE

Material: _____

Thickness: _____ inches Area: _____ in^2

Modulus of Elasticity, E: _____ $kips/in^2$

Coefficient of Restitution: _____

CAPBLOCK (hammer cushion)

Material: _____

Thickness: _____ inches Area: _____ in^2

Modulus of Elasticity, E: _____ $kips/in^2$

Coefficient of Restitution: _____

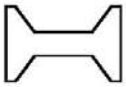

PILE CAP (helmet)

Helmet Weight: _____ lbs.

Bonnet Material: -

Anvil Block Remarks -

Drivehead -

Accessories -

PILE CUSHION

Cushion Material : _____

Thickness: _____ inches Area: _____ in^2

Modulus of Elasticity, E: _____ $kips/in^2$

Coefficient of Restitution: _____

PILE

Type: _____

Pile Width: _____ inches Length: _____ ft.

Outside Diameter: _____ in.

Wall Thickness: _____ in. Taper: _____

Cross Sectional Area: _____ in^2

Material: _____ Density: _____ pcf

Design Pile Capacity: _____ tons (Factor-of-Safety = _____

Description of Splice: -

Tip Treatment Description: -

Remarks: f'c = KSI, residual prestress = KSI

Submitted By: _____ Date: _____

Company: _____ Phone: _____

SECTION 32 11 00
BASE COURSES

PART 1 – GENERAL

1.01 SUMMARY

A. Description: This Section includes furnishing and placing subbase, permeable separator, and base course on a prepared surface and furnishing and applying primer for untreated permeable base course.

B. Section Includes:

1. Aggregate Subbase
2. Permeable Separator
3. Untreated Permeable Base Course
4. Aggregate Base
5. Hot Mix Asphalt Base Course
6. Hot Mix Glassphalt Base Course

1.02 REFERENCES

A. State of Hawaii Department of Transportation Standard Specifications (HSS):

1. HSS Section 301 Hot Mix Asphalt Base Course
2. HSS Section 304 Aggregate Base Course
3. HSS Section 305 Aggregate Subbase Course
4. HSS Section 306 Untreated Permeable Base Course
5. HSS Section 312 Hot Mix Glassphalt Base Course
6. HSS Section 313 Permeable Separator
7. HSS Section 717 Cullet and Cullet-Made Material
8. HSS City and County of Honolulu/Federal Projects Special Provision to Section 301, July 1, 2008
9. HSS City and County of Honolulu/Federal Projects Special Provision to Section 312, July 1, 2008
10. HSS City and County of Honolulu/Federal Projects Special Provision to Section 717, March 30, 2006

1.03 SUBMITTALS

A. General: Refer to Section 7.7 – Submittal Procedures, and Section 7.8 – Shop Drawings, Product Data, and Samples, for submittal requirements and procedures.

B. Establish and submit job-mix formula for hot mix asphalt base in accordance with HSS Subsection 301.02(C) – Submittals.

C. Establish and submit job-mix formula for hot mix glassphalt base in accordance with HSS Subsection 312.02(C) – Submittals.

1.04 QUALITY ASSURANCE

A. General: Refer to Section 7.10 – Quality Assurance, for quality assurance requirements and procedures.

PART 2 – PRODUCTS

2.01 MATERIALS

A. Aggregate Subbase: Conform to HSS Subsection 305.02 – Materials, HSS 717 – Cullet and Cullet-Made Materials, and to HSS City and County of Honolulu/Federal Projects Special Provision to Section 717, March 30, 2006.

B. Permeable Separator: Conform to HSS Subsection 313.02 – Materials.

C. Untreated Permeable Base Course: Conform to HSS Subsection 306.02 – Materials.

D. Aggregate Base Course: Conform to HSS Subsection 304.02 – Materials, HSS 717 – Cullet and Cullet-Made Materials, and to HSS City and County of Honolulu/Federal Projects Special Provision to Section 717, March 30, 2006.

E. Hot Mix Asphalt Base Course: Conform to HSS Subsection 301.02 – Materials.

F. Hot Mix Glassphalt Base Course: Conform to HSS Subsection 312.02 – Materials.

PART 3 – EXECUTION

3.01 AGGREGATE SUBBASE

A. Furnish and place aggregate subbase in accordance with HSS Subsection 305.03 – Construction.

3.02 PERMEABLE SEPARATOR

A. Furnish and place permeable separator in accordance with HSS Subsection 313.03 – Construction.

3.03 UNTREATED PERMEABLE BASE COURSE

A. Furnish and place untreated permeable base course in accordance with HSS Subsection 306.03 – Construction.

3.04 AGGREGATE BASE

A. Furnish and place aggregate base in accordance with HSS Subsection 304.03 – Construction.

3.05 HOT MIX ASPHALT BASE COURSE

A. Furnish and place hot mix asphalt base course in accordance with HSS Subsection 301.03 – Construction and in accordance with HSS City and County of Honolulu/Federal Projects Special Provision to Section 301, July 1, 2008.

3.06 HOT MIX GLASSPHALT BASE COURSE

A. Furnish and place hot mix glassphalt base course in accordance with HSS Subsection 312.03 – Construction and in accordance with HSS City and County of Honolulu/Federal Projects Special Provision to Section 312, July 1, 2008.

END OF SECTION

SECTION 32 12 00
FLEXIBLE PAVING

PART 1 – GENERAL

1.01 SUMMARY

A. Description:

1. Removing existing pavement by a cold planing process
2. Cleaning existing surface or pavement
3. Furnishing and applying tack coat on an existing asphalt or concrete surface, or both
4. Reconstructing weakened pavement areas of the existing roadway
5. Furnishing and placing paving fabric and asphalt cement between pavement layers
6. Furnishing and placing hot mix asphalt pavement on a prepared surface

B. Section Includes:

1. Cold Planing of Existing Pavement
2. Brooming Off
3. Tack Coat
4. Reconstruction of Weakened Pavement Areas
5. Paving Fabric
6. Hot Mix Asphalt Pavement

C. Related Sections:

1. Section 32 11 00 – Base Courses
2. considered included in the Contract prices for the various Contract pay items.

1.02 REFERENCES

A. State of Hawaii Department of Transportation Standard Specifications (HSS):

1. HSS Section 310 Brooming Off
2. HSS Section 401 Hot Mix Asphalt Pavement
3. HSS Section 407 Tack Coat
4. HSS Section 412 Paving Fabric
5. HSS Section 414 Reconstruction of Weakened Pavement Areas
6. HSS Section 415 Cold Planing of Existing Pavement

7. HSS City and County of Honolulu/Federal Projects Special Provision to Section 401, July 1, 2008

1.03 SUBMITTALS

A. General: Refer to Section 7.7 – Submittal Procedures, and Section 7.8 – Shop Drawings, Product Data, and Samples, for submittal requirements and procedures.

B. Establish and submit job-mix formula for each type of hot mix asphalt pavement mix, according to HSS Subsection 401.02(C) – Submittals.

C. Submit a full description in writing of the means and methodologies that will be used to prevent bituminous paver segregation according to HSS City and County of Honolulu/Federal Projects Special Provision to Section 401, July 1, 2008.

1.04 QUALITY ASSURANCE

A. General: Refer to Section 7.10 – Quality Assurance, for quality assurance requirements and procedures.

PART 2 – PRODUCTS

2.01 MATERIALS

A. Cold Planing of Existing Pavement: Conform to HSS Subsection 415.02 – Materials

B. Tack Coat: Conform to HSS Subsection 407.02 – Materials

C. Reconstruction of Weakened Pavement Areas: Conform to HSS Subsection 414.02 – Materials

D. Paving Fabric: Conform to HSS Subsection 412.02 – Materials

E. Hot Mix Asphalt Pavement: Conform to HSS Subsection 401.02 – Materials

PART 3 – EXECUTION

3.01 COLD PLANING OF EXISTING PAVEMENT

A. Remove existing pavement in accordance with HSS Subsection 415.03 – Construction.

3.02 BROOMING OFF

A. Clean existing surface or pavement in accordance with HSS Subsection 310.03 – Construction.

3.03 TACK COAT

A. Furnish and apply tack coat in accordance with HSS Subsection 407.03 – Construction.

3.04 RECONSTRUCTION OF WEAKENED PAVEMENT AREAS

A. Reconstruct weakened pavement areas in accordance with HSS Subsection 414.03 – Construction.

3.05 PAVING FABRIC

A. Furnish and place paving fabric in accordance with HSS Subsection 412.03 – Construction.

3.06 HOT MIX ASPHALT PAVEMENT

A. Furnish and place hot mix asphalt pavement in accordance with HSS Section 401.03 – Construction and in accordance with HSS City and County of Honolulu/Federal Projects Special Provision to Section 401, July 1, 2008.

END OF SECTION

SECTION 32 13 00
RIGID PAVING

PART 1 – GENERAL

1.01 SUMMARY

A. Description: This Section includes construction of Portland cement concrete pavement, with or without reinforcement, on a prepared surface.

B. Section Includes:

1. Portland Cement Concrete Pavement

C. Related Sections:

1. Section 03 05 15 – Portland Cement Concrete

1.02 REFERENCES

A. State of Hawaii Department of Transportation Standard Specifications (HSS):

1. HSS Section 411 Portland Cement Concrete Pavement

2. HSS City and County of Honolulu/Federal Projects Special Provision to Section 411, March 30, 2006

1.03 SUBMITTALS

A. General: Refer to Section 7.7 – Submittal Procedures, and Section 7.8 – Shop Drawings, Product Data, and Samples, for submittal requirements and procedures.

B. Submit paving plan in accordance with HSS Subsection 411.03(A) – Paving Plan.

1.04 QUALITY ASSURANCE

A. General: Refer to Section 7.10 – Quality Assurance for quality assurance requirements and procedures.

PART 2 – PRODUCTS

2.01 MATERIALS

A. Portland Cement Concrete Pavement: Conform to HSS Subsection 411.02 – Materials

PART 3 – EXECUTION

3.01 PORTLAND CEMENT CONCRETE PAVEMENT

A. Construct Portland cement concrete pavement in accordance with HSS Subsection 411.03 – Construction and in accordance with HSS City and County of Honolulu/Federal Projects Special Provision to Section 411, March 30, 2006.

B. Portland cement concrete shall be in accordance with Section 03 05 15 – Portland Cement Concrete.

END OF SECTION

SECTION 32 16 13
CONCRETE CURBS AND GUTTERS

PART 1 – GENERAL

1.01 SUMMARY

A. Description: This Section includes construction of or resetting portland cement concrete curb and gutter.

B. Section Includes:

1. Portland Cement Concrete Curbs and Gutters

C. Related Sections:

1. Section 03 05 15 – Portland Cement Concrete

1.02 REFERENCES

A. State of Hawaii Department of Transportation Standard Specifications (HSS):

1. HSS Section 638 Portland Cement Concrete Curb and Gutter

1.03 SUBMITTALS

A. General: Refer to Section 7.7– Submittal Procedures, and Section 7.8 – Shop Drawings, Product Data, and Samples, for submittal requirements and procedures.

1.04 QUALITY ASSURANCE

A. General: Refer to Section 7.10 – Quality Assurance for quality assurance requirements and procedures.

PART 2 – PRODUCTS

2.01 MATERIALS

A. Portland Cement Concrete Curb and Gutter: Conform to HSS Subsection 638.02 – Materials.

PART 3 – EXECUTION

3.01 PORTLAND CEMENT CONCRETE CURBS AND GUTTERS

A. Construct or reset portland cement concrete curbs and gutters in accordance with HSS Subsection 638.03 – Construction.

B. Portland cement concrete shall be in accordance with Section 03 05 15 – Portland Cement Concrete.

END OF SECTION

SECTION 32 17 23

PAVEMENT MARKINGS

PART 1 – GENERAL

1.01 SUMMARY

A. Description: This Section includes furnishing and installing temporary pavement markings; furnishing and installing permanent pavement markers and markings; and removing pavement markers and markings.

B. Section Includes:

1. Pavement Markings

1.02 REFERENCES

A. State of Hawaii Department of Transportation Standard Specifications (HSS):

1. HSS Section 629 Pavement Markings

2. HSS City and County of Honolulu/Federal Projects Special Provisions to Section 629, March 30, 2006

1.03 SUBMITTALS

A. General: Refer to Section 7.7 – Submittal Procedures, and Section 7.8 – Shop Drawings, Product Data, and Samples, for submittal requirements and procedures.

B. Submit samples of pavement markers and adhesives for testing in accordance with HSS Subsection 629.03(C)(1) – Permanent Pavement Markers.

1.04 QUALITY ASSURANCE

A. General: Refer to Section 7.10 – Quality Assurance for quality assurance requirements and procedures.

PART 2 – PRODUCTS

2.01 MATERIALS

A. Pavement markers and markings: Conform to HSS Subsection 629.02 – Materials.

PART 3 – EXECUTION

3.01 PAVEMENT MARKINGS

A. Furnish and install temporary pavement markings in accordance with HSS Subsection 629.03 – Construction and in accordance with HSS City and County of Honolulu/Federal Projects Special Provisions to Section 629, March 30, 2006.

B. Furnish and install permanent pavement markers and markings in accordance with HSS Subsection 629.03 – Construction.

C. Remove pavement markers and markings in accordance with HSS Subsection 629.03 – Construction.

END OF SECTION

SECTION 32 19 00

SIDEWALKS AND DRIVEWAYS

PART 1 – GENERAL

1.01 SUMMARY

A. Description: This Section includes constructing portland cement concrete sidewalks, curb ramps at existing or new sidewalk locations, and reinforced concrete driveways.

B. Section Includes:

1. Portland Cement Concrete Sidewalks
2. Curb Ramps
3. Reinforced Concrete Driveways

C. Related Sections

1. Section 03 05 15 – Portland Cement Concrete

1.02 REFERENCES

A. State of Hawaii Department of Transportation Standard Specifications (HSS):

1. HSS Section 610 Reinforced Concrete Driveways
2. HSS Section 634 Portland Cement Concrete Sidewalks
3. HSS Section 650 Curb Ramps

1.03 SUBMITTALS

A. General: Refer to Section 7.7 – Submittal Procedures, and Section 7.8 – Shop Drawings, Product Data, and Samples, for submittal requirements and procedures.

1.04 QUALITY ASSURANCE

A. General: Refer to Section 7.10 – Quality Assurance for quality assurance requirements and procedures.

PART 2 – PRODUCTS

2.01 MATERIALS

A. Portland Cement Concrete Sidewalks: Conform to HSS Subsection 634.02 – Materials

B. Curb Ramps: Conform to HSS Subsection 650.02 – Materials

C. Reinforced Concrete Driveways: Conform to HSS Subsection 610.02 – Materials

PART 3 – EXECUTION

3.01 PORTLAND CEMENT CONCRETE SIDEWALKS

A. Construct portland cement concrete sidewalks in accordance with HSS Subsection 634.03 – Construction.

3.02 CURB RAMPS

A. Construct curb ramps in accordance with HSS Subsection 650.03 – Construction.

3.03 REINFORCED CONCRETE DRIVEWAYS

A. Construct reinforced concrete driveways in accordance with HSS Subsection 610.03 – Construction.

B. Portland cement concrete shall be in accordance with Section 03 05 15 – Portland Cement Concrete.

END OF SECTION

SECTION 32 31 00
FENCES AND GATES

PART 1 – GENERAL

1.01 SUMMARY

A. Description: This Section includes construction of chain link fences and gates.

B. Section Includes:

1. Chain Link Fences and Gates

1.02 REFERENCES

A. State of Hawaii Department of Transportation Standard Specifications (HSS):

1. HSS Section 607 Chain Link Fences and Gates

1.03 SUBMITTALS

A. General: Refer to Section 7.7 – Submittal Procedures, and Section 7.8 – Shop Drawings, Product Data, and Samples, for submittal requirements and procedures.

1.04 QUALITY ASSURANCE

A. General: Refer to Section 7.10 – Quality Assurance for quality assurance requirements and procedures.

PART 2 – PRODUCTS

2.01 MATERIALS

A. Chain Link Fences and Gates: Conform to HSS Subsection 607.02 – Materials

PART 3 – EXECUTION

3.01 CHAIN LINK FENCES AND GATES

A. Construct fences and gates in accordance with HSS Subsection 607.03 – Construction.

END OF SECTION

This page intentionally left blank.

SECTION 32 71 15
GUARDRAIL AND IMPACT ATTENUATORS

PART 1 – GENERAL

1.01 SUMMARY

A. Description: This Section includes furnishing and installing guardrails, including assembly and erection of component parts, designated as follows: Type 3, Beam Type Guardrail and Type 4, Rigid Barrier Type Guardrail. Furnishing and installing terminal impact attenuators is also included.

B. Section Includes:

1. Guardrails
2. Terminal Impact Attenuators

1.02 REFERENCES

A. State of Hawaii Department of Transportation Standard Specifications (HSS):

1. HSS Section 606 Guardrail
2. HSS Section 693 Terminal Impact Attenuator

1.03 SUBMITTALS

A. General: Refer to Section 7.7 – Submittal Procedures, and Section 7.8 – Shop Drawings, Product Data, and Samples, for submittal requirements and procedures.

B. Submit a list of equipment and material in accordance with HSS Subsection 693.03(A) – Equipment List and Drawings.

1.04 QUALITY ASSURANCE

A. General: Refer to Section 7.10 – Quality Assurance for quality assurance requirements and procedures.

PART 2 – PRODUCTS

2.01 MATERIALS

A. Guardrails: Conform to HSS Subsection 606.02 – Materials

B. Terminal Impact Attenuators: Conform to HSS Subsection 693.02 – Materials

PART 3 – EXECUTION

3.01 GUARDRAILS

A. Furnish and install guardrails in accordance with HSS Subsection 606.03 – Construction.

3.02 TERMINAL IMPACT ATTENUATORS

A. Furnish and install in accordance with HSS Subsection 693.03 – Construction.

END OF SECTION

SECTION 32 80 00
TEMPORARY IRRIGATION

PART 1 – GENERAL

1.01 SUMMARY

A. Description:

1. Water all newly planted areas in quantity and frequency necessary to sustain plant growth. Install a temporary irrigation system. Contractor will be responsible for determining and establishing the water source and delivery method to the Project site. Replace watering equipment that cause erosion or runoff. Water will be considered an incidental cost. If there is slope erosion or movement of silt, remove displaced material immediately. Restore areas that are eroded to a depth greater than two inches of original grade or width greater than three inches. Cost to repair erosion due to watering shall be borne by the Contractor..

2. Watering or maintaining irrigation to existing planting areas not directly impacted by construction.

3. Salvaging irrigation equipment as directed by HART.

4. Repairing damaged sprinkler systems from the supply valves to the sprinkler heads within and adjacent to the work limits, as directed by HART.

B. Section Includes:

1. Temporary Irrigation System

2. Inspection

3. Repairing of Existing Sprinkler System

1.02 REFERENCES

A. National Sanitation Foundation International (NSF):

1. NSF 61 Drinking Water System Components – Health Effects

B. State of Hawaii Department of Transportation Standard Specifications (HSS):

1. HSS Section 616 Irrigation System

2. HSS Section 644 Repairing of Existing Sprinkler System

1.03 SUBMITTALS

A. General: Refer to Section 7.7 – Submittal Procedures, and Section 7.8 – Shop Drawings, Product Data, and Samples, for submittal requirements and procedures.

B. Submit construction schedule, equipment list, and shop drawings in accordance with HSS Subsection 616.03(C) – Pre-Construction Submittals.

C. Within 10 days after Award of Contract, submit six copies of separate equipment list for existing irrigation system materials to be salvaged or disposed. Describe equipment, manufacturer, size, and condition of items for direction from HART.

D. Within 10 days after Award of Contract, submit six copies of irrigation meter log, listing all existing meters found within the limits of construction and their respective meter numbers and service numbers.

E. Submit service manual, as-built drawings, and keys in accordance with HSS Subsection 616.03(D) – Post-Construction Submittals.

1.04 QUALITY ASSURANCE

A. General: Refer to Section 7.10 – Quality Assurance for quality assurance requirements and procedures.

PART 2 – PRODUCTS

2.01 MATERIALS

A. Temporary Irrigation System: Conform to HSS Subsection 616.02 – Materials

B. Repairing of Existing Sprinkler System: Conform to HSS Subsection 644.02 – Materials

PART 3 – EXECUTION

3.01 TEMPORARY IRRIGATION SYSTEM

A. Water or maintain irrigation to existing planting areas that may be indirectly impacted by construction due to equipment or irrigation lines located within the limits of construction.

B. Maintain irrigation meters and salvage backflow preventers for reuse. Other irrigation equipment such as sprinkler heads, valves, controllers, utility boxes, and related items shall be salvaged and delivered to the HDOT Highways O'ahu District Baseyard or disposed of at the discretion of HDOT.

C. Construct an irrigation system in accordance with HSS Subsection 616.03 – Construction.

D. Excavation and Trenching: Comply with HSS Section 616.03 – Construction.

3.02 INSPECTION

A. Inspect the pipe for defects before installation. Defective, damaged, or unsound pipe shall be rejected.

3.03 REPAIRING OF EXISTING SPRINKLER SYSTEM

A. Repair existing sprinkler systems in accordance with HSS Subsection 644.03 – Construction Requirements.

B. Repair of existing sprinkler system is incidental to other construction activities and no additional payment will be made for replacement parts or repair of the existing sprinkler system.

END OF SECTION

This page intentionally left blank.

SECTION 32 90 00

PLANTING

PART 1 – GENERAL

1.01 SUMMARY

A. Description:

1. Furnishing and placing of planting soil.
2. Planting and transplanting trees, shrubs, vines, groundcover, and grass; and constructing plant barriers and rock landscaping. This Section also provides maintenance instructions for a plant establishment period.
3. Application of mulch, seed adapted to work site, fertilizer, and water using hydraulic equipment in designated areas. This Section also provides maintenance instructions for a grass establishment period.
4. Installing erosion control mat over hydro-mulch seeding areas in downspout locations.
5. Maintaining existing landscape areas within work limits, as directed by HART.

B. Section Includes:

1. Planting Soil
2. Planting and Transplanting
3. Hydro-Mulch Seeding
4. Erosion Control Matting
5. Maintenance of Existing Areas

C. Related Sections:

1. Section 31 13 19 – Tree Salvage and Storage
2. Section 31 20 00 – Earth Moving
3. Section 31 05 21 - Geotextiles

1.02 REFERENCES

A. State of Hawaii Department of Transportation Standard Specifications (HSS):

1. HSS Section 203 Excavation and Embankment
2. HSS Section 617 Planting Soil
3. HSS Section 619 Planting
4. HSS Section 641 Hydro-Mulch Seeding
5. HSS Section 716 Geotextiles

6. HSS Section 643 Maintenance of Existing Landscape Areas

1.03 SUBMITTALS

A. General: Refer to Section 7.7 – Submittal Procedures, and Section 7.8 – Shop Drawings, Product Data, and Samples, for submittal requirements and procedures.

1.04 QUALITY ASSURANCE

A. General: Refer to Section 7.10 – Quality Assurance for quality assurance requirements and procedures.

PART 2 – PRODUCTS

2.01 MATERIALS

A. Planting Soil: Conform to HSS Subsection 617.02 – Materials

B. Planting: Conform to HSS Subsection 619.02 – Materials

C. Hydro-Mulch Seeding: Conform to HSS Subsection 641.02 – Materials

D. Erosion Control Mat. Mat shall be made of natural, biodegradeable materials, such as jute or coconut coir fibers, with a minimum weight of 0.9 lbs/sy to meet ASTM D 5261, ASTM D 4595, and conform to HSS Subsection 716.07 – Geotextiles for Permanent Erosion Control Applications

PART 3 – EXECUTION

3.01 PLANTING SOIL

A. Excavate and place select material in accordance with Section 31 20 00 – Earthwork. Furnish and place planting soil in accordance with HSS Subsection 617.03 – Construction.

3.02 PLANTING

A. Plant and transplant trees, shrubs, vines, groundcover, and grass; and construct plant barriers and rock landscaping in accordance with HSS Subsection 619.03 – Construction.

B. Install weed blocking geotextiles in accordance with HSS Subsection 619.03 – Construction.

3.03 TREE SALVAGE

A. Transplant trees in accordance with Section 31 13 19 – Tree Salvage and Storage.

3.04 HYDRO-MULCH SEEDING

A. Apply hydro-mulch seeding in accordance with HSS Subsection 641.03 – Construction.

3.05 EROSION CONTROL MATTING

A. Install erosion control mat per manufacturer's recommendations.

3.06 MAINTENANCE OF EXISTING AREAS

A. Maintain existing areas in accordance with HSS Subsection 643.03 – Construction Requirements.

END OF SECTION

This page intentionally left blank.

SECTION 33 05 16
UTILITY CASINGS

PART 1 – GENERAL

1.01 SUMMARY

A. Description:

1. This Section includes furnishing and installing casings for pipelines carrying flammable and non-flammable substances and duct lines containing wires and cables across and under proposed Honolulu Rail Transit Project (HRTP) tracks or other railroad tracks.

2. Casing pipe shall be installed in accordance with the standard details DPW Det. S-5 for sewer and BWS Det. B1 for water or where shown on the Design Plans.

B. Section Includes:

1. Casing Installation
2. Corrosion Control
3. Electrical Continuity Test
4. Protection at Ends of Casing
5. Vents
6. Signs
7. Shut-Off Valves
8. Inspection and Testing

C. Related Sections:

1. Section 03 05 15 – Portland Cement Concrete
2. Section 03 11 00 – Concrete Forming
3. Section 03 20 00 – Concrete Reinforcing
4. Section 03 35 00 – Concrete Finishing
5. Section 03 40 00 – Precast Concrete
6. Section 26 42 01 – Corrosion Control and Cathodic Protection
7. Section 26 42 02 – Corrosion Control Systems Testing
8. Section 33 10 00 – Water Utilities
9. Section 33 30 00 – Sanitary Sewer Utilities
10. Section 33 51 00 – Gas Distribution Utilities

11. Section 33 52 00 – Fuel Distribution Utilities

1.02 REFERENCES

A. American National Standards Institute, Inc./American Society of Mechanical Engineers (ANSI/ASME):

1. ANSI/ASME B31.4 Pipeline Transportation Systems for Liquid Hydrocarbons and other Liquids

2. ANSI/ASME B31.8 Gas Transmission and Distribution Piping Systems

B. American Railway Engineering and Maintenance-of-Way Association (AREMA):

1. AREMA Manual Manual for Railway Engineering, Volume 1

C. ASTM International (ASTM):

1. ASTM D1248 Standard Specification for Polyethylene Plastics Extrusion Materials for Wire and Cables

D. American Welding Society (AWS):

1. AWS D1.1 Structural Welding Code – Steel

E. State of Hawaii Department of Transportation Standard Specifications (HSS):

1. HSS Section 204 Excavation and Backfill for Miscellaneous Facilities

1.03 GENERAL REQUIREMENTS

A. Note that all utility casings that are to be owned or maintained by jurisdictions other than the City shall conform to the applicable requirements of the utility owner's standard drawings and specifications. The Contractor is responsible for obtaining all such standards and for compliance with such standards as applicable. In case of conflicts between this specification and utility owner's standard specifications, the latter will govern.

1.04 SUBMITTALS

A. General: Refer to Section 7.7 – Submittal Procedures, and Section 7.8 – Shop Drawings, Product Data, and Samples, for submittal requirements and procedures.

B. Submit working drawings to show details on systems, to include relationship to other systems and true position and details of interfaces, connections, plan and profile angle of crossing, offsets, materials, list of materials showing manufactures' names, and other pertinent data, and to show details of testing and temporary restraints.

C. Submit shop drawings and manufacturer's detail drawings of pipe and corrosion control products to show each type of joint and each type of corrosion control connection, to describe corrosion control welding method, and to show corrosion monitoring details.

1.05 QUALITY ASSURANCE

A. General: Refer to Section 7.10 – Quality Assurance, for quality assurance requirements and procedures.

1.06 PRODUCT DELIVERY, STORAGE, AND HANDLING

A. Handle and place products in a manner that will ensure that installed products will be in sound, undamaged condition.

PART 2 – PRODUCTS

2.01 SOURCE QUALITY CONTROL

A. Regardless of tolerance permitted by referenced standards, reject pipe which has chips, cracks, blisters in coating and lining, rough interior or exterior surface, evidence of structural weakness, porosity, joint defect, significant variation from theoretical shape, or other imperfections which might contribute, to an accelerated deterioration, reduced functional capability, or reduced structural strength will be rejected.

2.02 CASING

A. Steel casing shall be of minimum yield strength of 35,000 psi, minimum wall thickness of 0.375 inch, and shall conform to requirements of the AREMA "Manual for Railway Engineering," Volume 1, Section 1, Part 5.

B. High-density polyethylene casings shall be ASTM D1248, Type III or IV, Class C, Grade P34.

2.03 CONCRETE ENCASEMENT

A. At locations where the installation is by open cut and casing pipe is required, but cannot be installed due to elbows or other obstructions, plain or reinforced concrete encasement may be used when approved by HART and the utility owner.

B. The concrete encasement must be a minimum 6 inches thick around the pipe. A 6 x 6 – W2.9 x W2.9 welded wire fabric shall be placed in the concrete on all sides.

2.04 CORROSION CONTROL PRODUCTS

A. Casing spacers and insulators shall be capable of electrically isolating casing from carrier pipe and of ensuring that the least distance between casing and nearest portion of carrier pipe will be 1 inch. Casing insulators shall be high density injected molded polyethylene as manufactured by either F.H. Malony Co., PSI Products, Inc., or T.D. Williamson, or approved equal.

B. Welding material shall be thermite type and either Erico Products, Inc., Cadweld Process or Continental Industries, Inc. Thermoweld Process, or approved equal. Mold size and shape, charge size, and powder alloy mixture shall conform to welding materials manufacturer's printed recommendations.

C. Neoprene link seal may be used instead of rubber seal for carrier pipes containing flammable or hazardous substances.

D. Corrosion monitoring stations shall be as indicated on the Design Plans and conform to Section 26 42 01 – Corrosion Control and Cathodic Protection.

PART 3 – EXECUTION

3.01 CASING INSTALLATION

A. Trenching and backfilling for casing installation shall be in accordance with HSS Subsection 204.03 – Construction, and the Design Plans.

B. Install in accordance with the AREMA "Manual for Railway Engineering," Volume 1, Chapter 1, Part 5. Casing to be installed under active tracks shall be jacked into place. Casing pipe shall be constructed to prevent leakage of substances from the casing throughout its length except at ends of casing where ends are left open or through vent pipes when ends of casing are sealed. Casing shall be installed to prevent the formation of a waterway under the tracks with an even bearing throughout its length and shall slope to one end (except for longitudinal occupancies).

C. Casing pipe shall be installed by the following methods:

1. Jacking: This method shall be in accordance with the current AREMA "Manual for Railway Engineering," Volume 1, Chapter 1, Part 4, Section 4.13 "Earth Boring and Jacking Culvert Pipe through Fills." This operation shall be conducted without hand-mining ahead of the pipe and without the use of boring, auguring, or drilling equipment. Bracing and backstops shall be so designed and jacks of sufficient rating used so that the jacking can be progressed without stoppage (except for adding lengths of pipe) until the leading edge of the pipe is at least the required distance beyond the last track.

2. Open Cut: Installation by open cut shall comply with the requirements of local jurisdiction for installation of pipe culverts.

D. The inside diameter of the casing pipe shall be such as to allow the carrier pipe to be removed subsequently without disturbing the casing or the roadbed. For steel pipe casing, the inside diameter of the casing pipe shall be at least 6 inches greater than the largest outside diameter of the carrier pipe joints or couplings or as shown on the Design Plans.

E. Minimum length of casing pipe under trackbed shall be as shown on the Design Plans.

F. For flexible casing pipe, a minimum vertical deflection of the casing pipe of 3 percent of its diameter, plus 1/2 inch, shall be provided so that no loads from the roadbed, track, traffic or casing pipe itself are transmitted to the carrier pipe.

G. When steel casing pipe is used, the joints shall be fully welded completely around the circumference of the pipe in accordance with AWS D1.1 requirements for field welded pipe. The weld shall develop the full strength of the casing pipe. Weld detail shall be shown on the shop drawings.

H. Install high-density polyethylene or polyvinyl chloride casing in accordance with manufacturer recommendations.

3.02 CORROSION CONTROL

A. Install insulators and end seals in accordance with manufacturer's printed installation instructions. The number of insulators shall be as recommended by the manufacturer of the carrier pipe service, with a maximum spacing of 7 feet. Install not less than two insulators for each pipe length. An insulator shall be placed no more than 12 inches from the end of the casing.

B. Corrosion monitoring stations shall be installed at metallic casings in accordance with Section 26 42 01 – Corrosion Control and Cathodic Protection, and as indicated on the Design Plans.

3.03 ELECTRICAL CONTINUITY TEST

A. Metallic casing will be tested in accordance with Section 26 42 02 – Corrosion Control System Testing, for electrical resistance with a DC source of not more than 24 volts, and while carrier pipe in-place but electrically-isolated from uncased pipeline. Resistance of coated carrier pipe to casing shall be 100,000 ohms; and that of uncoated carrier pipe to casing shall be 1,000 ohms; lesser resistances will be subject to review; additional tests may be performed to determine corrective actions to be taken. Correct causes of resistance being less than that stipulated. Submit all test data and calculations.

3.04 PROTECTION AT ENDS OF CASING

A. Casings for carriers of flammable or hazardous substances shall be suitably sealed to the outside of the carrier pipe. Details of seals shall be shown on the shop drawings.

B. Casings for carriers of non-flammable substances shall have both ends of the casing covered with a rubber casing seal. Details of seals shall be shown on the shop drawings.

C. Where ends of casings are at or above ground surface and above high water level, they may be left open, provided drainage is afforded in such a manner that leakage will be conducted away from railroad tracks and structures.

3.05 VENTS

A. Sealed casings for flammable substance shall be properly vented. Vent pipes shall be of sufficient diameter, but in no case less than 2 inches in diameter, and shall be attached near each end of the casing.

B. Street-type vents shall be installed in accordance with utility standards.

3.06 SIGNS

A. All pipelines (except those in streets where it would not be practical to do so) shall be prominently marked at rights-of-way (on both sides of tracks for undercrossings) by durable weatherproof signs located on the edge of right-of-way. Signs shall show the following:

1. Name and address of owner
2. Contents of pipe
3. Pressure of pipe

4. Depth of pipe below grade at point of sign

5. Emergency telephone in the event of pipe rupture

3.07 SHUT-OFF VALVES

A. Accessible emergency shut-off valves shall be installed on each side of the track at locations selected by HART where hazard to life and property should be guarded against. No additional valves will be required where pipelines are provided with automatic control stations and within distances approved by HART.

3.08 INSPECTION AND TESTING

A. For pipeline carrying flammable or hazardous materials, ANSI B31.8 and B31.4, current at time of constructing the pipeline shall govern the inspection and testing of the facility except that proof testing of strength of carrier pipe shall be in accordance with the requirements of ANSI B31.8 for location Classes 2, 3, or 4 or ANSI B31.4, as applicable, for all pipelines carrying oil, liquefied petroleum gas, natural or manufactured gas, and other flammable substances.

END OF SECTION

SECTION 33 05 25
MAINTENANCE OF EXISTING UTILITIES

PART 1 – GENERAL

1.01 SUMMARY

A. Description: This Section includes maintenance, support, and protection of existing underground utilities, as indicated.

B. Section Includes:

1. Construction Requirements
2. Installation of Electrical Lines

C. Construction Requirements Related Sections:

1. Section 02 26 00 – Hazardous Material Assessment
2. Section 02 41 00 – Demolition
3. Section 03 05 15 – Portland Cement Concrete
4. Section 03 11 00 – Concrete Forming
5. Section 03 20 00 – Concrete Reinforcing
6. Section 03 35 00 – Concrete Finishing
7. Section 03 40 00 – Precast Concrete Section
8. 26 05 48 – Vibration and Seismic Controls for Electrical Systems
9. Section 26 05 53 – Identification for Electrical Systems
10. Section 26 08 10 – Testing of Electrical Systems
11. Section 26 56 19 – Roadway Lighting
12. Section 31 50 00 – Excavation Support and Protection
13. Section 32 11 00 – Base Courses
14. Section 32 12 00 – Flexible Paving
15. Section 32 13 00 – Rigid Paving
16. Section 32 16 13 – Concrete Curbs and Gutters
17. Section 32 19 00 – Sidewalks and Driveways
18. Section 32 80 00 – Irrigation
19. Section 33 05 16 – Utilities Casings
20. Section 33 05 25 – Maintenance of Existing Utilities

21. Section 33 10 00 – Water Utilities
22. Section 33 30 00 – Sanitary Sewer Utilities
23. Section 33 40 00 – Storm Drainage Utilities
24. Section 33 51 00 – Gas Distribution Utilities
25. Section 33 52 00 – Fuel Distribution Utilities
26. Section 34 41 00 – Roadway Signaling and Control Equipment

1.02 REFERENCES

A. Building Industry Consulting Services Incorporated Telecommunication Distribution Manual

B. Electrical Utility Service Equipment Requirements Committee (EUSERC)

1. Section 300 Metering and Service Equipment (0-600 Volts)

C. Hawaiian Electric Company Electrical Service Installation Manual (ESIM),

D. Hawaiian Telcom. Inc Standard Specifications for Placement of Telephone Systems

E. National Electrical Manufacturers Association

1. NEMA 250 Enclosures for Electrical Equipment (1000 Volts Maximum)

F. National Fire Protection Association

1. NFPA 70 National Electrical Code

G. Oceanic Time Warner Cable Service Installation Requirements

H. Underwriters Laboratory

1. UL 50 UL Standard for Safety Enclosures for Electrical Equipment, Non-Environmental Considerations.

1.03 RELOCATION OF EXISTING UTILITIES

A. It is anticipated that utility owners will relocate certain utilities affected by the construction of Honolulu Rail Transit Project (HRTP) facilities in accordance with the utility agreement signed between HART and each affected utility owner. The Contractor is responsible for coordinating construction schedules and work interfaces with these affected utility owners to ensure the Contract work to progress on schedule and without unreasonable disruption of such utility services.

1. Any relocation of Navy potable waterlines under this project shall be the responsibility of HRTP and/or its construction contractor. Coordinate any shutdown of the Navy water system with NAVFAC Hawaii Water Utilities at ph. 473-0037. Contractor shall not operate Navy water valves.

B. The existing overhead and underground electric/communications lines are in-use and must remain in operation during construction. The Contractor shall schedule the work

accordingly and allow the utility companies, the City and County and the State Department of Transportation 24-hour access to their equipment and lines. Costs for any temporary systems or relocations arising during construction and for the convenience of the Contractor shall be borne by the Contractor. Work by the Contractor in areas with energized electrical equipment or conductors shall be performed with extreme caution to prevent accidents and to avoid disturbing or damaging this equipment or conductors or any temporary supports or protective guards that are constructed. The Contractor shall have sole responsibility for maintaining safe and efficient working conditions and procedures within the project site.

1.04 COORDINATION

A. Coordinate with the affected property owner and/or lessee to notify them of the work involved and the schedule for the work. Obtain and pay for street usage permit, if required, and trenching permit, if required.

B. Coordinate the detailed switch-over procedure for the electric and communications services for each parcel requiring service conversions with Hawaiian Electric Co., Hawaiian Telcom Inc and Oceanic Time Warner Cable.

C. Coordinate installation of new electric, telephone and cable television service connections and equipment with the respective utility companies and coordinate the installation of the service equipment to be within the easements established, if easements are required, or in accordance with the drawings if the service equipment is to be located on State or City land.

D. Coordinate arrangement, mounting and support of electrical equipment to meet the installation requirements of the aforementioned utility companies with regard to mounting heights and clearances. See current editions of the respective service installation requirements.

E. Pay for and secure the Department of Planning and Permitting permit for modifications to existing electrical and communications service equipment, for new electrical and communication service equipment and schedule the City inspection for all service conversions and for all new utility services to private properties.

1.05 SUBMITTALS

A. General: Refer to Section 01 33 00 – Submittal Procedures, and Section 01 33 23 – Shop Drawings, Product Data, and Samples, for submittal requirements and procedures.

B. Product Data: For each type of meter socket, utility splice enclosure (pullbox), instrument meter enclosure, outdoor metering equipment enclosure, metering equipment supports and communications cabinet.

1.06 QUALITY ASSURANCE

A. General: Refer to Section 01 43 00 – Quality Assurance, for quality assurance requirements and procedures.

B. Testing Agency Qualifications: Comply with Section 26 08 10 – Testing of Electrical Systems.

C. Electrical Components, Devices and Accessories: Listed and labeled as defined in NFPA 70, by a qualified testing agency and marked for intended location and application.

D. Comply with NFPA 70.

PART 2 – PRODUCTS

2.01 ELECTRICAL SERVICE EQUIPMENT

A. Meter Sockets: Ampacity class as indicated on the drawings. All meter sockets shall have provisions for utility seals. Under 200A class meter sockets shall be of NEMA 3R stainless steel construction with factory installed test by-pass device and socket cover. Instrument rated meter sockets shall have quantity of jaws indicated on the drawings, be of NEMA 3R Stainless Steel construction, come complete with manual circuit closing device and socket cover.

B. Splice Enclosures: Dimensions as indicated on the drawings, NEMA 3R, stainless steel construction with provisions for utility seals.

C. Metering Equipment enclosures: Dimensions as indicated on the drawings, NEMA 3R, stainless steel construction with dual lock hasp. Enclosures shall be provided with one 4-digit combination brass lock. Finish equipment enclosure as indicated on the drawings.

D. Metering Equipment Supports: Provide where indicated on the drawings. Fabricated of stainless steel piping with welded stainless steel cross-members located to allow for attachment of metering equipment enclosures. Embed a minimum of 18" below finish grade supported by free-poured concrete footing a minimum of 12" in diameter.

E. Communications Cabinets: Provide weatherproof, stainless steel cabinets of the dimensions indicated on the drawings complete with termite-treated ¾" thick plywood backboard.

F. See Section 26 28 16 for manufacture and installation requirements of associate's service disconnect switches and main breakers.

PART 3 – EXECUTION

3.01 CONSTRUCTION REQUIREMENTS

A. Underground utilities shall be marked for identification by the affected utility owners before any excavation or other work close to underground pipelines, conduit, ducts, wires, or other structures is performed. Notify HART and utility owners before performing any such excavation work. Affected utilities shall be notified at least five full working days before the scheduled digging by calling Hawaii One Call Center at 1-866-423-7287. For all non-member utility owners not covered by this telephone number, affected utility owners shall be called directly.

1. NAVFAC Hawaii potable water utilities, wastewater utilities and electrical power utilities do not participate in the Hawaii One Call program. For potable water utilities, contractor will be provided with maps of Navy waterlines in work vicinity. Contractor shall be responsible for any damages to Navy waterlines caused by his work/activities.

B. Maintain existing utilities and protect from damage as necessary to satisfy the requirements of the utility jurisdiction and related codes and regulations. If underground utilities are damaged in any way, notify HART and affected utility owners immediately for corrective action. The Contractor is responsible for paying for repair of damages to existing utilities, in accordance with the General Conditions.

C. Do not operate, disconnect, or shut down any part of existing utilities and services, except by permission of authorities that have jurisdiction. Submit a schedule of estimated shut-down time to obtain this permission and notify all interested parties, utilities, and jurisdictional agencies, as required.

D. Utilities shut-down time shall be kept to a minimum. Do not remove an existing utility line or service until the replacement line, crossover, or capping has been performed.

E. Provide shoring, underpinning, and structural support for existing utility lines and structures that become suspended or otherwise unsupported because of adjacent excavation operations.

F. Make provisions for temporary utility services, as required by General Conditions.

G. Restoration of Surfaces:

1. To accommodate traffic immediately after backfilling the trench and prior to constructing the permanent restoration, a temporary patch of cold-mix asphalt concrete shall be constructed over the compacted backfill by the Contractor. The cold-mix asphalt shall be compacted to a minimum thickness of 1-1/2 inches and shall be slightly humped – not to exceed 3/8 inch for trench width less than 2 feet, and 3/4 inch for trench width greater than 2 feet.

2. Paving Repairs: Where trenches, pits, or other excavations are made in existing roadways and other areas of pavement where surface treatment of any kind exists, the Contractor shall restore such surface treatment or pavement to the same thickness and in the same kind as previously existed, except as otherwise specified, and to match and tie into the adjacent and surrounding existing surfaces.

3. Any damage to the existing traffic signal system, traffic loop detection, or surface structures incurred while executing utility work shall be repaired at no cost to HART.

H. Permanent restoration work shall be performed in accordance with requirements of the City and County of Honolulu or State of Hawaii, and with Sections 32 11 00 – Base Courses, 32 12 00 – Flexible Paving, 32 13 00 – Rigid Paving, 32 16 13 Concrete Curbs and Gutters, and 32 19 00 Sidewalks and Driveways

3.02 INSTALLATION OF ELECTRICAL LINES

A. Install electric service equipment in accordance with the drawings and in conformance with the requirements of Hawaiian Electric Co. and with their service drawings.

B. Install telephone service equipment in accordance with the drawings and in conformance with the requirements of Hawaiian Telcom Inc.

C. Install telephone service equipment in accordance with the drawings and in conformance with the requirements of Oceanic Time Warner Cable Inc.

D. Comply with mounting and anchoring requirements specified in Section 26 05 48 – Vibration and Seismic Controls for Electrical Systems.

E. Temporary Lifting Provisions: Remove temporary lifting eyes, channels and brackets and temporary blocking of moving parts from enclosures and components.

F. Maintain minimum and maximum height restrictions and clearances for meter sockets, utility splice enclosures, service equipment supports, communications cabinets and metering equipment enclosures.

G. Comply with NFPA 70 and NECA 1.

H. Installation of conduits, wiring, enclosures, switches, circuit breakers, and panelboards shall comply with the installation requirements stated in the respective Specification Sections of this Specification.

END OF SECTION

SECTION 33 10 00
WATER UTILITIES

PART 1 – GENERAL

1.01 SUMMARY

A. Description: This Section includes constructing, reconstructing, and adjusting manholes and valve boxes for the water system; constructing water systems and appurtenances; and constructing cathodic protection for the water system.

B. Section Includes:

1. Water System
   a. Unless otherwise noted, all waterlines denoted on the plans with a W## (## = diameter of pipe, ex W24 – 24" Dia. pipe) are subject to the Standards of the Board of Water Supply including those owned by the Department of Transportation – Airport Division.
   b. NAVFAC Water lines are denoted on the plans with "W## (Navy)" and are subject to the NAVFAC standards.
2. Corrosion Control and Cathodic Protection.
3. Irrigation and Non-Potable Water Systems
4. Connection to Existing Water Systems
5. Water System Locating Devices

C. Related Sections:

1. Section 03 05 15 – Portland Cement Concrete
2. Section 03 11 00 – Concrete Forming
3. Section 03 20 00 – Concrete Reinforcing
4. Section 03 35 00 – Concrete Finishing
5. Section 03 40 00 – Precast Concrete
6. Section 26 42 01 – Corrosion Control and Cathodic Protection
7. Section 26 42 02 – Corrosion Control Systems Testing
8. Section 32 80 00 – Irrigation
9. Section 33 05 16 – Utilities Casings
10. Section 33 05 25 – Maintenance of Existing Utilities

1.02 REFERENCES

A. City and County of Honolulu, Board of Water Supply Water System Standards:

1. Division 100 Planning
2. Division 200 Materials
3. Division 300 Construction
4. Division 400 Approved Material List and Standard Details
5. Division 500 Volume 3, External Corrosion Control Standards

B. State of Hawaii Department of Transportation Standard Specifications (HSS):

1. HSS Section 204 Excavation and Backfill for Miscellaneous Facilities
2. HSS Section 624 Water System
3. HSS Section 626 Manholes and Valve Boxes for Water and Sewer Systems
4. City and County of Honolulu/Federal Projects Special Provision to Section 712 (March 30, 2006)
5. City and County of Honolulu/Federal Projects Special Provision to Section 717 (March 30, 2006)

C. Naval Facilities Engineering Command (NAVFAC), NAVFAC Hawaii, Public Works Utilities Criteria – For Design and Construction: Electrical, Sewer, and Water (2006):

1. Chapter 1 Introduction
2. Chapter 4 Water

D. NAVFAC Hawaii Revisions to Unified Facilities Guide Specifications for Sections 26 42 13 00 – Cathodic Protection by Galvanic Anodes and 33 11 00 - Water Distribution (Feb 2011)

E. NAVFAC Hawaii Water Utilities Requirements for Contractors Requesting Temporary Water Services, latest edition

F. NAVFAC Hawaii Water Utilities Requirements for New Connections to the Navy Potable Water System, latest edition

G. Department of Parks and Recreation, City and County of Honolulu – Standard Specifications for Water Systems (Sept. 1999)

H. Department of Parks and Recreation, City and County of Honolulu – Standard Specifications for Irrigation Systems (Oct. 2003)

I. Department of Defense Standard Practice – Standard Practice for Unified Facilities Criteria and Unified Facilities Guide Specifications (Feb. 2006)

1.03 SUBMITTALS

A. General: Refer to Section 7.7 – Submittal Procedures, and Section 7.8 – Shop Drawings, Product Data, and Samples, for submittal requirements and procedures.

B. Certificates of Compliance: Submit certification that all materials used shall conform to the standards and specifications of the jurisdictional agencies and utility owners.

C. Record Drawings: Submit final as-built information with reference stationing, offset, and depth in accordance with the requirements of the jurisdictional agencies and utility owners.

1.04 QUALITY ASSURANCE

A. General: Refer to Section 7.10 – Quality Assurance, for quality assurance requirements and procedures.

PART 2 – PRODUCTS

2.01 MATERIALS

A. Manholes: Conform to City and County of Honolulu, Board of Water Supply Water System Standards, Division 200 – Materials, HSS Subsection 626.02 – Materials, and/or HSS City and County of Honolulu/Federal Projects Special Provision to Section 712 (March 30, 2006).

B. Frame and Covers: Conform to City and County of Honolulu, Board of Water Supply Water System Standards, Division 200 – Materials, HSS Subsection 626.02 – Materials, and/or HSS City and County of Honolulu/Federal Projects Special Provision to Section 712 (March 30, 2006).

C. Water System: Conform to City and County of Honolulu, Board of Water Supply Water System Standards, Division 200 – Materials, HSS Subsection 624.02 – Materials, and/or HSS City and County of Honolulu/Federal Projects Special Provision to Sections 712 and 717 (March 30, 2006).

1. Navy Water System: conform to Naval Facilities Engineering Command (NAVFAC), NAVFAC Hawaii, Public Works Utilities Criteria – For Design and Construction: Electrical, Sewer, and Water Section 4.2 – Waterlines and Section 4.3 Water Valves and NAVFAC Hawaii Revisions to Unified Facilities Guide Specifications for Section 33 11 00 - Water Distribution Section 2.1.

D. Structure and trench backfill for water manholes, pipes and appurtenances in accordance with City and County of Honolulu, Board of Water Supply Water System Standards, Division 200 – Materials and/or HSS Subsection 204.02 – Materials.

E. For air relief valves on non-potable water lines, provide air-relief valves for wastewater service. Requirements include:

1. Manufacturers:
   a. Val-Matic
   b. GA Industries.
   c. Crispin.
   d. ARI.

2. Valves: Fully automatic float operated valves designed to release air from the piping system while the system is in operation and under pressure.

3. For wastewater services provide valves with the following:
   a. Extended valve body.

b. 2-inch cleanout.
c. Minimum 2-inch inlet.
d. 1/2-inch outlet with stainless steel ball valve with hose connection.
e. 1-inch drain with stainless steel ball valve.

4. Provide ball valve as specified herein.

5. Valves 3-inch and Smaller: NPT inlet and outlet connections equivalent to the valve size.

6. Provide stainless steel ball valve for isolation as specified herein.

7. Provide valves with two (2) additional NPT connections for the addition of gauges and for testing, and draining.

8. Provide valve body with a through flow area equal to the nominal valve size.

9. Provide valves with a bolted cover and flat gasket.

10. Provide guide shafts supported by bushings.

11. Floats: Provide floats with bottom shaped for accelerated closure.

12. Seats to provide drop tight shut off at full valve pressure rating.

13. Provide vacuum check on valve outlet to prevent air from re-entering the system during negative pressure conditions

14. Materials:
    a. Valve Body, Cover and Baffle:
        1) ASTM A126 Class B Cast Iron for Class 125 valves.
        2) ASTM A536 Grade 65-45-12 Cast Ductile Iron, ANSI Class 300
        3) ASTM A216 Grade WCB cast steel, ANSI Class 300.
        4) ASTM A351 Grade CF8M stainless steel.
    b. Floats, Guide Shafts and Bushings: Type 316 stainless steel.
    c. Seats: Buna-N.
    d. Hardware: Type 316 stainless steel.
    e. Interior Valve Coating: Fusion bonded epoxy.

F. Corrosion Control and Cathodic Protection System: Conform to Section 26 42 01 – Corrosion Control and Cathodic Protection and/or the City and County of Honolulu, Board of Water Supply Water System Standards, Division 500 – External Corrosion Control Standards.

1. For Navy water lines, see NAVFAC Hawaii, Public Works Utilities Criteria – For Design and Construction, Section 4.2.9 – Cathodic Protection.

PART 3 – EXECUTION

3.01 WATER SYSTEM

A. Construct water manholes in accordance with City and County of Honolulu, Board of Water Supply Water System Standards, Division 300 – Construction, NAVFAC Hawaii, Public Works Utilities Criteria – For Design and Construction, Chapter 4 - Water and/or HSS Subsection 626.03 – Construction.

B. Construct water systems in accordance with City and County of Honolulu, Board of Water Supply Water System Standards, Division 300 – Construction, NAVFAC Hawaii, Public Works Utilities Criteria – For Design and Construction and/or HSS Subsection 624.03 – Construction and/or City and County of Honolulu, Department of Parks and Recreation - Standard Specifications for Water Systems.

1. Any utility work near Navy waterlines, whether new construction of Navy Water utilities and/or installation of all other utilities, whether Navy owned or not, shall be provided with the horizontal and vertical clearances as indicated in Reference D sketch entitled "Water/Utility Clearance Criteria".

C. Excavation and backfill for water manholes and appurtenances and excavation and backfill trenches for water pipes shall be in accordance with City and County of Honolulu, Board of Water Supply Water System Standards, Division 300 – Construction and/or HSS Subsection 204.03 – Construction.

3.02 CORROSION CONTROL AND CATHODIC PROTECTION

A. Construct cathodic protection system in accordance with Section 26 42 01 – Corrosion Control and Cathodic Protection, Part 3 – Execution and/or the City and County of Honolulu, Board of Water Supply Water System Standards, Division 500 – External Corrosion Control Standards and/or NAVFAC Hawaii, Public Works Utilities Criteria – For Design and Construction, Section 4.2.9– Cathodic Protection.

B. Perform cathodic protection system testing and insulating coating testing in accordance with Section 26 42 02 – Corrosion Control System Testing, Part 3 – Execution and/orthe City and County of Honolulu, Board of Water Supply Water System Standards, Division 500 – External Corrosion Control Standards and NAVFAC Hawaii Revisions to Unified Facilities Guide Specifications for Sections 26 42 13 00 – Cathodic Protection by Galvanic Anodes.

3.03 IRRIGATION AND NON-POTABLE WATER SYSTEM

A. For newly designed irrigation systems see Section 32 80 00 – Irrigation and/or City and County of Honolulu, Department of Parks and Recreation - Standard Specifications for Irrigation Systems within DPR property.

B. For relocation of irrigation lines;

1. In Department of Parks and Recreation property, remove, clean, salvage, and turn-in existing sprinkler heads to DPR, if removing sprinkler heads.

2. Contractor is to maintain sprinkler head to sprinkler head coverage where distribution lines have been relocated.

3. Contractor to match pipe material of existing pipe connections. Contractor to submit change request to HART and owner of pipe for verification of pipe material.

3.04 CONNECTIONS TO EXISTING WATER SYSTEMS

A. Connections to existing water systems in accordance with City and County of Honolulu, Board of Water Supply Water System Standards, Division 302.30 – Connections, Relocations & Lowering of Water Mains and Laterals and/or HSS Subsection 624.03(K) – Connections to or adjusting of Existing Mains.

1. For Navy water lines, see NAVFAC Hawaii Water Utilities Requirements for New Connections to the Navy Potable Water System

B. Disinfect new potable water system in accordance with City and County of Honolulu, Board of Water Supply Water System Standards, Division 302.29 – Chlorination of Water Pipeline and/or HSS Subsection 624.03(L) – Disinfection.

1. For Navy water lines, see NAVFAC Hawaii Water Utilities Requirements for New Connections to the Navy Potable Water System.

C. Pressure test new water lines including irrigation water mains larger than 3-inches in accordance with City and County of Honolulu, Board of Water Supply Water System Standards, Division 302.28 – Pipe Pressure Tests and/or HSS Subsection 624.03(J) - Testing. For additional information on Irrigation, see Irrigation Specification 32 80 00.

1. For Navy water lines, see NAVFAC Hawaii Water Utilities Requirements for New Connections to the Navy Potable Water System.

3.05 WATER SYSTEM LOCATING DEVICES

A. Installation of detectable devices for the purpose of locating water lines are to be installed in accordance with City and County of Honolulu, Board of Water Supply Water System Standards, Division SP-17 – Electronic Markers and as denoted on the plans.

1. For Navy water lines, see NAVFAC Hawaii, Public Works Utilities Criteria – For Design and Construction, Section 4.2.5 – Warning Tape and Tracer Wire.

END OF SECTION

SECTION 33 30 00

SANITARY SEWERAGE UTILITIES

PART 1 – GENERAL

1.01 SUMMARY

A. Description: This Section includes constructing, reconstructing, and adjusting manholes for sewer system; and constructing sewer systems and appurtenances.

B. Section Includes:

1. Sewer System
   a. Unless otherwise noted, all sewer lines denoted on the plans with a S## (## = diameter of pipe, ex S24 – 24" Dia. pipe) are subject to the Standards of the Department of Public Works including those owned by the Department of Transportation – Airport Division.
   b. NAVFAC Sewer lines are denoted on the plans with "S## (Navy)" and are subject to the NAVFAC standards.

C. Related Sections:

1. Section 03 05 15 – Portland Cement Concrete
2. Section 03 11 00 – Concrete Forming
3. Section 03 20 00 – Concrete Reinforcing
4. Section 03 35 00 – Concrete Finishing
5. Section 03 40 00 – Precast Concrete
6. Section 33 05 16 – Utilities Casings
7. Section 33 05 25 – Maintenance of Existing Utilities

1.02 REFERENCES

A. City and County of Honolulu:

1. Standard Specifications for Public Works Construction, September 1986
2. Standard Details for Public Works Construction, September 1984
3. Department of Wastewater Management Design Standards, Volume 1, July 1993

B. State of Hawaii Department of Transportation Standard Specifications (HSS):

1. HSS Section 204 Excavation and Backfill for Miscellaneous Facilities
2. HSS Section 625 Sewer System
3. HSS Section 626 Manholes and Valve Boxes for Water and Sewer Systems

4. City and County of Honolulu/Federal Projects Special Provision to Section 712 (March 30, 2006)

5. City and County of Honolulu/Federal Projects Special Provision to Section 717 (March 30, 2006)

C. Naval Facilities Engineering Command (NAVFAC) Hawaii – Public Works Utilities Criteria, April 2006:

1. Chapter 1 Introduction

2. Chapter 3 Sewer

1.03 SUBMITTALS

A. General: Refer to Section 7.7 – Submittal Procedures, and Section 7.8 – Shop Drawings, Product Data, and Samples, for submittal requirements and procedures.

B. Certificates of Compliance: Submit certification that all materials used shall conform to the standards and specifications of the jurisdictional agencies and utility owners.

C. Record Drawings: Submit final as-built information with reference stationing, offset, and depth in accordance with the requirements of the jurisdictional agencies and utility owners.

1. In addition to as-built information, NAVFAC requires CCTV Inspection post-constructive activities in accordance with Naval Facilities Engineering Command (NAVFAC) Hawaii – Public Works Utilities Criteria Section 3.2.12.5 – Post-Construction CCTV Inspection.

1.04 QUALITY ASSURANCE

A. General: Refer to Section 7.10 – Quality Assurance, for quality assurance requirements and procedures.

PART 2 – PRODUCTS

2.01 MATERIALS

A. Manholes: Conform to City and County of Honolulu Standard Specifications for Public Works Construction Section 23, HSS Subsection 626.02 – Materials, and/or HSS City and County of Honolulu/Federal Projects Special Provision to Section 712 (March 30, 2006).

1. For Navy manholes conform to Naval Facilities Engineering Command (NAVFAC) Hawaii – Public Works Utilities Criteria Section 3.2.12.4 Manholes.

B. Frame and Covers: Conform to City and County of Honolulu Standard Specifications for Public Works Construction Section 23, HSS Subsection 626.02 – Materials, and/or HSS City and County of Honolulu/Federal Projects Special Provision to Section 712 (March 30, 2006).

1. For Navy manholes conform to Naval Facilities Engineering Command (NAVFAC) Hawaii – Public Works Utilities Criteria Section 3.2.12.4 Manholes.

C. Sewer System: Conform to City and County of Honolulu Standard Specifications for Public Works Construction Sections 18 ~ 22, HSS Subsection 625.02 – Materials, and/or HSS City and County of Honolulu/Federal Projects Special Provision to Section 717 (March 30, 2006).

1. For Navy sewer system conform to Naval Facilities Engineering Command (NAVFAC) Hawaii – Public Works Utilities Criteria Section 3.2 Sewer Lines.

D. Structure and trench backfill for sewer manholes, pipes and appurtenances shall be in accordance with City and County of Honolulu Standard Specifications for Public Works Construction Sections 11 and 13 and/or HSS Subsection 204.02 – Materials.

PART 3 – EXECUTION

3.01 SEWER SYSTEM

A. Construct sewer manholes in accordance with City and County of Honolulu Standard Specifications for Public Works Construction Section 23, Standard Details for Public Works Construction, and Department of Wastewater Management Design Standards, NAVFAC Hawaii Public Works Utilities Criteria Chapter 3, and/or HSS Subsection 626.03 – Construction.

B. Construct sewer systems in accordance with City and County of Honolulu Standard Specifications for Public Works Construction Sections 18 ~ 22, Standard Details for Public Works Construction, and Department of Wastewater Management Design Standards, NAVFAC Hawaii Public Works Utilities Criteria Chapter 3, and/or HSS Subsection 625.03 – Construction.

C. Excavation and backfill for sewer manholes and appurtenances and excavation and backfill trenches for sewer pipes shall be in accordance with City and County of Honolulu Standard Specifications for Public Works Construction Sections 11 and 13 and/or HSS Subsection 204.03 – Construction.

D. All temporary sanitary sewer facilities provided by the Contractor during construction shall be removed and replaced with new permanent facilities.

END OF SECTION

This page intentionally left blank.

SECTION 33 40 00
STORM DRAINAGE UTILITIES

PART 1 – GENERAL

1.01 SUMMARY

A. Description:

1. Fabricating, furnishing, and installing culverts and structural plate culverts, and constructing reinforced concrete collars. Circular corrugated metal, reinforced concrete, spiral rib metal, and high-density polyethylene pipes; polyvinyl chloride pipes; corrugated metal and concrete pipe arches; and structural metal plate pipes are hereinafter referred to as "culvert" unless otherwise noted.

2. Constructing, reconstructing, and adjusting manholes, inlets, catch basins, and other types of drainage structures. Manholes, inlets, catch basins, and other types of drainage structures are hereinafter referred to as "structures" unless otherwise noted.

3. Furnishing, installing, and adjusting steel and cast iron frames and covers for drainage structures.

4. Furnishing and installing underdrains.

5. Furnishing and placing slotted drains.

6. Constructing lined drainage ditches and spillways.

7. Furnishing and placing dumped riprap on prepared surface.

B. Section Includes:

1. Culverts and Storm Drains

2. Manholes, Inlets, and Catch Basins

3. Underdrains

4. Slotted Drains

5. Lined Drainage Ditch and Concrete Spillways

6. Dumped Riprap

7. Excavation and Backfill

C. Related Sections:

1. Section 03 05 15 – Portland Cement Concrete

2. Section 03 11 00 – Concrete Forming

3. Section 03 20 00 – Concrete Reinforcing

4. Section 03 35 00 – Concrete Finishing

5. Section 03 40 00 – Precast Concrete
6. Section 33 05 16 – Utilities Casings
7. Section 33 05 25 – Maintenance of Existing Utilities

1.02 REFERENCES

A. City and County of Honolulu:

1. Standard Specifications for Public Works Construction, September 1986
2. Standard Details for Public Works Construction, September 1984

B. State of Hawaii Department of Transportation Standard Specifications (HSS):

1. HSS Section 206 Excavation and Backfill for Drainage Facilities
2. HSS Section 603 Culverts and Storm Drains
3. HSS Section 604 Manholes, Inlets, and Catch Basins
4. HSS Section 605 Underdrains
5. HSS Section 637 Slotted Drains
6. HSS Section 640 Lined Drainage Ditch and Concrete Spillways
7. HSS Section 655 Dumped Riprap
8. City and County of Honolulu/Federal Projects Special Provision to Section 712 (March 30, 2006)
9. City and County of Honolulu/Federal Projects Special Provision to Section 717 (March 30, 2006)

1.03 SUBMITTALS

A. General: Refer to Section 7.7 – Submittal Procedures, and Section 7.8 – Shop Drawings, Product Data, and Samples, for submittal requirements and procedures.

B. Submit joint detail and joining method for culverts in accordance with HSS Subsection 603.03(D) – Joining Culverts.

C. Certificates of Compliance: Submit certification that all materials used shall conform to the standards and specifications of the jurisdictional agencies and utility owners.

D. Record Drawings: Submit final as-built information with reference stationing, offset, and depth in accordance with the requirements of the jurisdictional agencies and utility owners.

1.04 QUALITY ASSURANCE

A. General: Refer to Section 7.10 – Quality Assurance, for quality assurance requirements and procedures.

PART 2 – PRODUCTS

2.01 MATERIALS

A. Culverts and Storm Drains: Conform to City and County of Honolulu Standard Specifications for Public Works Construction Section 24, HSS Subsection 603.02 – Materials, and/or HSS City and County of Honolulu/Federal Projects Special Provision to Section 717 (March 30, 2006).

B. Manholes, Inlets and Catch Basins: Conform to City and County of Honolulu Standard Specifications for Public Works Construction Sections 25 and 26, HSS Subsection 604.02 – Materials, and/or HSS City and County of Honolulu/Federal Projects Special Provision to Sections 712 and Section 717 (March 30, 2006).

C. Underdrains: Conform to City and County of Honolulu Standard Specifications for Public Works Construction Section 28 and/or HSS Subsection 605.02 – Materials.

D. Slotted Drains: Conform to HSS Subsection 637.02 – Materials.

E. Lined Drainage Ditch and Concrete Spillways: Conform to City and County of Honolulu Standard Specifications for Public Works Construction Section 27 and/or HSS Subsection 640.02 – Materials.

F. Dumped Riprap: Conform to HSS Subsection 655.02 – Materials.

G. Structure and trench backfill for storm drain manholes, pipes, and drainage structures shall be in conformance with City and County of Honolulu Standard Specifications for Public Works Construction Sections 11 and 13 and/or HSS Subsection 206.02 – Materials.

PART 3 – EXECUTION

3.01 CULVERTS AND STORM DRAINS

A. Fabricate, furnish, and install culverts in accordance with City and County of Honolulu Standard Specifications for Public Works Construction Section 24 and Standard Details for Public Works Construction and/or HSS Subsection 603.03 – Construction.

3.02 MANHOLES, INLETS AND CATCH BASINS

A. Construct and reconstruct manholes, inlets, and catch basins in accordance with City and County of Honolulu Standard Specifications for Public Works Construction Sections 25 and 26 and Standard Details for Public Works Construction and/or HSS Subsection 604.03 – Construction.

3.03 UNDERDRAINS

A. Furnish and install underdrains in accordance with City and County of Honolulu Standard Specifications for Public Works Construction Section 28 and Standard Details for Public Works Construction and/or HSS Subsection 605.03 – Construction.

3.04 SLOTTED DRAINS

A. Furnish and place slotted drains in accordance with HSS Subsection 637.03 – Construction.

3.05 LINED DRAINAGE DITCH AND CONCRETE SPILLWAYS

A. Construct lined drainage ditches and spillways in accordance with City and County of Honolulu Standard Specifications for Public Works Construction Section 27 and Standard Details for Public Works Construction and/or HSS Subsection 640.03 – Construction.

3.06 DUMPED RIPRAP

A. Furnish and place dumped riprap in accordance with HSS Subsection 655.03 – Construction.

3.07 EXCAVATION AND BACKFILL

A. Excavation and backfill for storm drain manholes and drainage structures, and excavation and backfill trenches for storm drain pipes shall be in accordance with City and County of Honolulu Standard Specifications for Public Works Construction Sections 11 and 13 and/or HSS Subsection 206.03 – Construction.

END OF SECTION

SECTION 33 51 00
GAS DISTRIBUTION UTILITIES

PART 1 – GENERAL

1.01 SUMMARY

A. Description:

1. This Section includes temporary traffic control, trench excavation and backfill, trench support system, and pavement restoration in support of the relocation of gas lines shown on the Design Plans.

2. Relocation of The Gas Company's (dba Hawaii Gas) gas lines shown on the Design Plans shall be reviewed and constructed by Hawaii Gas or affiliate. The Contractor is responsible for coordinating construction schedules and work interfaces with Hawaii Gas.

B. Section Includes:

1. Construction Requirements

C. Related Sections:

1. Section 33 05 16 – Utilities Casings

2. Section 33 05 25 – Maintenance of Existing Utilities

1.02 REFERENCES

A. State of Hawaii Department of Transportation Standard Specifications (HSS):

1. HSS Section 204 Excavation and Backfill for Miscellaneous Facilities

2. HSS Section 645 Work Zone Traffic Control

1.03 SUBMITTALS

A. General: Refer to Section 7.7 – Submittal Procedures, and Section 7.8 – Shop Drawings, Product Data, and Samples, for submittal requirements and procedures.

B. Submit traffic control plans and modifications and deviations to accepted traffic control plans in accordance with HSS Subsection 645.03 – Construction.

1.04 QUALITY ASSURANCE

A. General: Refer to Section 7.10 – Quality Assurance, for quality assurance requirements and procedures.

PART 2 – PRODUCTS

2.01 MATERIALS

A. Materials used for provision of temporary traffic shall conform to HSS Subsection 645.02 – Materials.

B. Material used for trench backfill shall conform to HSS Subsection 204.02 – Materials.

PART 3 – EXECUTION

3.01 CONSTRUCTION REQUIREMENTS

A. Temporary Traffic Control:

1. The Contractor shall perform work zone traffic control in accordance with HSS Subsection 645.03 – Construction and coordinate with Hawaii Gas.

B. Trench Excavation, Support and Backfill:

1. Underground utilities shall be marked by the Contractor for identification by the affected utility agencies or companies before any excavation or other work close to any underground pipeline, conduit, duct, wire, or other structure is performed. Notify HART and utility owners before performing any such excavation work. Notify affected utilities at least 5 full working days before the scheduled digging by calling Hawaii One Call Center at 1-866-423-7287. For all non-member utility owners, call the affected utility owners directly.

2. The Contractor shall dig and expose the lines as marked in the field and indicated on the Design Plans.

3. The Contractor shall provide shoring or slope the trench excavation that is over 5 feet deep, as required by the Occupational Safety and Health Administration (OSHA) and in accordance with Section 31 50 00 – Excavation Support and Protection.

4. The Contractor shall provide pumping systems to keep trench excavation that is below the water table dry for work. Dewatering procedures shall comply with all applicable Federal, State, and City and County ordinances and regulations concerning water pollution prior to its release into waterways or drainage systems.

5. The Contractor shall manage excavated dirt in a clean and orderly fashion.

6. The Contractor shall coordinate with Hawaii Gas, who will inspect and approve trenches in which new pipeline will be installed and/or old pipeline will be removed.

7. The Contractor shall excavate and backfill trenches in accordance with HSS Subsection 204.03 – Construction.

8. The Contractor shall place a detectable warning tape in the backfill in accordance with HSS Subsection 204.03 – Construction.

9. The Contractor shall be responsible for concrete jacketing of gas lines per plans.

10. Hawaii Gas will be responsible for all pipe installations, removals, and cathodic protectection.

END OF SECTION

This page intentionally left blank.

SECTION 33 52 00

FUEL DISTRIBUTION UTILITIES

PART 1 – GENERAL

1.01 SUMMARY

A. Description:

1. Relocation of Hawaii Independent Energy's fuel oil lines specified with "BY OTHERS" on the Design Plans shall be completed by Hawaii Independent Energy. The Contractor is responsible for coordinating construction schedules and work interfaces with Hawaii Independent Energy. Removal of Chevron fuel oil lines shall be completed by the Contractor and coordinated with Chevron.

B. Section Includes:

1. Construction Requirements

C. Related Sections:

1. Section 33 05 16 – Utilities Casings
2. Section 33 05 25 – Maintenance of Existing Utilities

1.02 REFERENCES

A. American National Standard Institute/American Society of Mechanical Engineers (ANSI/ASME):

1. ANSI/ASME B31.4 Pipeline Transportation Systems for Liquid Hydrocarbons and Other Liquids

B. American Petroleum Institute (API):

1. API Standard 1104 Welding of Pipelines and Related Facilities

C. Chevron Standard Specifications:

1. PPL-EG-1800 Onshore Pipeline Construction

D. Code of Federal Regulations (CFR):

1. 49 CFR 195 U.S. Department of Transportation, 2004 – Transportation of Hazardous Liquids by Pipeline

1.03 SUBMITTALS

A. General: Refer to Section 7.7 – Submittal Procedures, and Section 7.8 – Shop Drawings, Product Data, and Samples, for submittal requirements and procedures.

B. Shop Drawings: Submit layout of piping and fittings for review and approval.

C. Certificates of Compliance: Submit certification that all materials used and furnished by the Contractor conform to utility owners' standards and specifications.

D. Procedures and Qualifications: Submit welding procedures and welder qualification for interstate hydrocarbon pipeline welding, in compliance with Title 49, CFR 195 and in full accordance with API Standard 1104.

E. Test Report: Submit test results of 100 percent x-ray on all welds.

F. Record Drawings: Submit final as-built information with reference stationing, offset, and depth in accordance with utility owners' requirements.

1.04 QUALITY ASSURANCE

A. General: Refer to Section 7.10 – Quality Assurance, for quality assurance requirements and procedures.

B. All workmen employed by the Contractor or by any subcontractor and conducting the work of this Section shall have sufficient experience in fuel oil pipeline construction and knowledge of the requirements of the Chevron's Standard Specifications PPL-EG-1800 – Onshore Pipeline Construction and the requirements of the American Petroleum Institute (API). The following contractor is qualified by Chevron to conduct the work described in this Section:

IMC
91-39 Hanua Street
Kapolei, HI 96707
Phone: (808) 682-5363
Attention: Les Sutton

If the Contractor elects to use a subcontractor other than those that are pre-qualified, the Contractor shall certify that the subcontractor is familiar with and meets the requirements of the following regulations:

1. Title 49 CFR Part 195 – Transportation of Hazardous Liquids by Pipeline
2. ANSI/ASME B31.4 – Pipeline Transportation Systems for Liquid Hydrocarbons and Other Liquids
3. American Petroleum Institute (API) Standard 1104 – Welding of Pipelines and Related Facilities

PART 2 – PRODUCTS

2.01 MATERIALS

A. Material Supplied by Chevron:

1. New pipe required for the work of this Section will be furnished by Chevron Products Company. Chevron will supply fusion-bonded epoxy A106-API-5L Grade B/X42 seamless pipes that have been pre-tested in accordance with Hawaii Department of Transportation (HDOT) requirements.

2. Repair kits for coating.

3. Shrink sleeves or liquid epoxy.

4. Test station boxes and appurtenances.

B. Materials and Equipment Furnished by the Contractor: Provide all equipment and tools required for construction, and all materials not shown on the list of materials supplied by Chevron (Article 2.01.A herein). Materials to be furnished by Contractor shall include, but are not limited to the following:

1. Pipe Backfill Material: Pipe backfill material shall be screened topsoil or S4C.

2. Wrapping System for White Oil Weld Joints: Raychem TPS, WPCT, or equivalent.

3. Wrapping System for Black Oil Weld Joints: Raychem WPC-100-M or equivalent for 180F application.

4. All items of a consumable nature such as welding rods, tape, shims, cleaners, lumber, and gasoline, as required.

5. All tools, equipment, hoses, pipe fittings, and trucks.

6. All safety equipment required by Chevron, including but not limited to hard hats, safety shoes, safety glasses, and gloves.

7. Furnish, install, re-set, remove, and maintain road plates.

8. Furnish, install, relocate, and remove safety signs and safety barricades.

PART 3 – EXECUTION

3.01 CONSTRUCTION REQUIREMENTS

A. All piping materials and welding installation procedures and workmanship shall conform to Title 49, CFR 195.

B. Trench Excavation and Backfill:

1. Provide shoring, or slope the trench excavation that is over 5 feet deep, as required by the Occupational Safety and Health Administration (OSHA).

2. Provide pumping systems to keep trench excavation that is below the water table dry for work. Dewatering procedures shall comply with all applicable Federal, State, and City and County ordinances and regulations on water pollution prior to its release into waterways or drainage systems.

3. Manage excavated dirt in a clean and orderly fashion.

4. Coordinate with Chevron Products Company, who will inspect and approve trenches in which new pipeline will be installed prior to installation. The Contractor shall prepare all trenching to the satisfaction of Chevron Products Company prior to installing pipe and appurtenances.

5. Backfill trench with screened topsoil until pipe is covered by at least 1 foot.

6. Install temporary road plates as necessary.

7. Repair any road or sidewalk to its original or better condition after work completion.

8. Restore the permanent roadway in accordance with requirements of the City and County of Honolulu or State of Hawaii Department of Transportation (HDOT).

C. Contractor Coordination with Chevron:

1. Chevron will furnish all materials shown on Chevron-furnished materials listed in Article 2.01A herein.

2. Throughout the construction period, provide a materials person to keep a current tally of all Chevron-provided materials, both installed and in storage.

3. It is the Contractor's responsibility to account for any and all missing Chevron-supplied materials that have been accepted as delivered and signed for.

4. If additional quantities of items on the list of materials supplied by Chevron are required to complete the work of this Section, promptly notify Chevron's Construction Representative. Chevron requires 7 days' written notice for materials before accepting responsibility for holding up a job due to lack of material. Chevron shall assume no responsibility for lack of materials.

D. Delivery of Chevron-Furnished Materials:

1. Be responsible for transporting Chevron-supplied materials from Chevron's refinery to the work site.

2. Be responsible for taking inventory of all materials.

3. Track the use of Chevron-supplied materials and be responsible for all materials via a Chevron-supplied holding yard.

4. Return all surplus materials remaining at the end of the work to Chevron's holding yard.

E. Removal and Disposal of Existing Replaced Pipelines:

1. The Contractor shall remove the abandoned portion of replaced pipelines (including the 4-inch tracer line), cut, and transport to the Chevron holding yard.

2. The Contractor shall repair existing improvements to original or better condition.

F. Pre-Construction Meeting:

1. Prior to the start of construction, a meeting will be held between HART, the Contractor, the subcontractor, and Chevron's Construction Representative.

G. Post-Construction Job Walk:

1. Work will not be accepted until it is 100 percent complete, after a post-construction meeting has been held with the parties listed in Article 3.01G herein, and after all "punchlist" items are completed.

END OF SECTION

This page intentionally left blank.

SECTION 33 70 00

ELECTRICAL UTILITIES

PART 1 – GENERAL

1.01 SUMMARY

A. Description:

1. This Section includes:
   a. The work and coordination required for relocation of existing Hawaiian Electric Company (HECO) facilities and provision of new HECO electrical services to transit facilities. In general, provide complete underground utility support structures including: duct lines; conduits; precast and cast-in-place concrete manholes; handholes; service boxes; and equipment pads to be used for HECO cables and equipment.
   b. The work and coordination required for the relocation of existing NAVFAC-HAW 12 kV overhead and underground facilities. In general provide complete underground and overhead support structures including: ductlines; conduits; pre-cast and cast-in-place concrete manholes; equipment pads; poles; cross-arms; insulators; guy and anchor assemblies; medium-voltage insulated cables; aerial conductors; splices; and connector for a complete replacement electrical system.
2. Work does not include underground conduit and duct line construction using trenchless installation methods (e.g., directional drilling, pipe jacking, microtunneling, and types of installation methods other than open-cut trenching).
3. Work by Others:
   a. Overhead and Underground 138-kilovolt (kV) Relocations: All work (design and construction) shall be performed by HECO or its consultants and contractors.
   b. Overhead-to-Overhead Relocation (46-kV and below voltages): All work (design and construction) shall be performed by HECO or its consultants and contractors.
   c. Overhead-to-Underground or Underground-to-Underground Relocations (46-kV and below voltages): All electrical cable and equipment work (design and construction) shall be performed by HECO or its consultants and contractors.

B. Section Includes:

1. General Requirements
2. Excavation
3. Placing and Compacting Backfill
4. Conduit Installation
5. Concrete Work
6. Controlled Low-Strength Materials Installation

7. Thermal Concrete and Fluidized Thermal Backfill Installation
8. Precast Manhole, Handhole, and Vault Installation
9. Grounding System
10. Overhead Distribution
11. Underground Distribution

C. Related Sections:

1. Section 03 05 15 – Portland Cement Concrete
2. Section 03 11 00 – Concrete Forming
3. Section 03 15 00 – Concrete Accessories
4. Section 03 20 00 – Concrete Reinforcing
5. Section 03 30 00 – Cast-In-Place Concrete
6. Section 03 35 00 – Concrete Finishing
7. Section 03 40 00 – Precast Concrete

1.02 REFERENCES

A. American Association of State Highway and Transportation Officials (AASHTO):

1. AASHTO M 198 — Standard Specification for Joints for Concrete Pipe, Manholes, and Precast Box Sections Using Preformed Flexible Joint Sealants

B. American Concrete Institute (ACI):

1. ACI 229R-99 — Controlled Low-Strength Materials

C. American National Standards Institute (ANSI):

1. ANSI C80.1 — American National Standard for Electrical Rigid Steel Conduit (ERSC)

D. ASTM International (ASTM):

1. ASTM A276 — Standard Specification for Stainless Steel Bars and Shapes
2. ASTM C31 — Standard Practice for Making and Curing Concrete Test Specimens in the Field
3. ASTM C33 — Standard Specification for Concrete Aggregates
4. ASTM C39 — Standard Test Method for Compressive Strength of Cylindrical Concrete Specimens
5. ASTM C143 — Standard Test Method for Slump of Hydraulic-Cement Concrete

6. ASTM C150 — Standard Specification for Portland Cement
7. ASTM C231 — Standard Test Method for Air Content of Freshly Mixed Concrete by the Pressure Method
8. ASTM C618 — Standard Specification for Coal Fly Ash and Raw or Calcinated Natural Pozzolan for Use in Concrete
9. ASTM C891 — Standard Practice for Installation of Underground Precast Concrete Utility Structures
10. ASTM D4832 — Standard Test Method for Preparation and Testing of Controlled Low Strength Material (CLSM) Test Cylinders
11. ASTM D6103 — Standard Test Method for Flow Consistency of Controlled Low Strength Material (CLSM)

E. City and County of Honolulu Department of Public Works:

1. Standard Specifications, September 1986

F. Hawaiian Electric Company (HECO) Specifications and Manual:

1. No. CS7001-17 — Construction of Underground Facilities
2. No. CS7003 — Construction of Electrical Facilities
3. No. CS7202 — General Conditions for Construction of Projects
4. No. CS9301 — Cast-in-Place Concrete Work
5. No. CS9401 — Design and Construction of Precast Concrete Manholes, Handholes and Vaults
6. No. M0302 — Warning Tape for Underground Conduit Systems
7. Electric Service Installation Manual

G. Hawaii Administrative Rules (HAR):

1. HAR Chapter 6-73 — Installation, Operations, and Maintenance of. Overhead and Underground Electrical Supply and Communication Lines

H. State of Hawaii Standard Specifications

1. HSS Section 204 — Excavation and Backfill for Miscellaneous Facilities

I. Institute of Electrical and Electronics Engineers (IEEE):

1. IEEE C2 — National Electrical Safety Code (NESC)
2. IEEE 442 — Guide for Soil Thermal Resistivity Measurements

J. National Electrical Safety Code (NESC):

1. NESC Overhead Standards Book
2. NESC Underground Standards Book

K. National Fire Protection Agency (NFPA):

1. NFPA 70 National Electrical Code

L. Underwriters Laboratories (UL):

1. UL 467 UL Standard for Safety Grounding and Bonding Equipment
2. UL 6 UL Standard for Safety Electrical Rigid Metal Conduit – Steel

M. U. S. Department of Defense Unified Facilities Guide Specifications

1. Section 26 05 13 Medium Voltage Cables
2. Section 33 71 01 Overhead Transmission and Distribution
3. Section 33 71 02 Underground Electrical Distribution

1.03 SUBMITTALS

A. General: Refer to Section 7.7 – Submittal Procedures, and Section 7.8 – Shop Drawings, Product Data, and Samples, for submittal requirements and procedures.

B. Shop Drawings: Submit for approval of catalog cuts, fabrication drawings, schedules, and other descriptive information for the following items, to show compliance with the Design Plans. Partial submission will not be accepted.

1. Precast concrete manholes, handholes, service boxes, and equipment pads. For utility system pullboxes, handholes, manholes, obtain approvals from respective utility company prior to submission for Engineer's approval.
2. Wood utility poles, cross-arms, pole line hardware, cut-outs, fuses and aerial conductors
3. Medium voltage cables and splice kits

C. Thermal Concrete and Fluidized Thermal Backfill: Submit thermal concrete and fluidized thermal backfill design mixes, and strength test reports for approval prior to application.

D. Product Data: Submit manufacturer's product data for the materials proposed for use by the Contractor.

E. Certification: Where precast concrete handholes and manholes are to be used in areas exposed to traffic, submit certification that the design of precast handholes and manholes meet requirements for AASHTO HS20 loading.

F. Record Drawings: Submit final as-built information with reference stationing, offset, and depth in accordance with HECO requirements.

1.04 QUALITY ASSURANCE

A. General: Refer to Section 7.10 – Quality Assurance, for quality assurance requirements and procedures.

PART 2 – PRODUCTS

2.01 BEDDING FOR UNDERGROUND STRUCTURES

A. Service Boxes and Structures without Bottom Slabs (Open Base): 4-inch-minimum thickness of No. 3 fine gravel; ASTM C-33-03, No. 67.

B. Underground Structures with Bottom Slabs (Closed Base): 4-inch-minimum thickness of clean, well-graded granular material with a maximum particle size of 3 inches, and less than 3 percent passing the No. 200 sieve or select borrow.

2.02 CONVENTIONAL BACKFILL

A. Trench Material for Direct Buried Ducts and Conduits:

1. Type B Material: For the first lift from the bottom of the duct or conduit to 8 inches above the duct or conduit barrel, or for the cushion under the duct or conduit, select granular material passing a 1-inch sieve, such as 3/4-inch aggregate base course gravel or material that is free of organics, debris, or highly plastic clay and meets the following gradation:

Sieve Size	Percent Passing by Weight
1 inch	100
3/4 inch	90 – 100
No. 4	35 – 100
No. 40	10 – 20
No. 200	3 – 15

2. Type A Material: For the intermediate lift from 8 inches above the duct or conduit barrel to 2 feet below the existing or proposed finished grade, select material conforming to the requirements of the City and County of Honolulu Department of Public Works Standard Specifications (September 1986), Section 16 – Borrow; or select native soil material that does not contain more than 50-percent gravel and does not contain hard lumps of earth 3 inches in greatest dimension, rocks larger than 3 inches in largest dimension, highly plastic clay, poorly graded sand and gravel, organics, debris, or other unsuitable or deleterious materials.

3. For the surface or top 2-foot lift, see Article 2.02C herein, for material requirements.

B. Trench for Encased buried Ducts and Conduits, and Excavation for Underground Structures, Foundations and Pads:

1. Imported or native soil that is free of organics, debris and other deleterious material may be used in backfilling. The material shall meet Type A material requirements, as specified in Article 2.02A.2 herein.

C. Surface or Top 2-foot Lift of All Trenches and Excavation, for Underground Structures and Foundations in Streets and Highways:

1. Select material conforming to City and County or State of Hawaii Department of Transportation (HDOT) requirements for subbase course.

2. Aggregate material conforming to City and County or State of Hawaii Department of Transportation (HDOT) requirements for aggregate base course for the base course layer.

3. Topsoil for the top 6-inch layer in trenches across lawn or planting area.

4. The finished surface shall match the original ground surface or existing improvement prior to trenching in material composition and in thickness. The finished product shall be equal to or better than the original.

D. Cold-Mix Asphalt Concrete: Cold-mix asphalt concrete for temporary trench and underground structure excavation patches shall conform to resurfacing mix requirements of the City and County or State of Hawaii Department of Transportation (HDOT), as applicable.

E. Electrical Detectable Warning Tape: Minimum thickness of 4 thousandths of an inch (mils), with a solid aluminum core or aluminum backing for detection with metal detector. Tape shall be 6 inches wide, red in color for electrical power lines, and imprinted with "CAUTION BURIED ELECTRIC LINE BELOW" in black lettering. For all HECO duct lines, provide electrical detectable warning tape in accordance with HECO Specification No. M0302 – Warning Tape for Underground Conduit Systems.

2.03 CONCRETE

A. Concrete Materials: Forms, reinforcing steel, and related materials shall conform to the following sections of these Specifications and HECO Specification No. CS9301 – Cast-in-Place Concrete Work.

1. Section 03 05 15 – Portland Cement Concrete

2. Section 03 11 00 – Concrete Forming

3. Section 03 15 00 – Concrete Accessories

4. Section 03 20 00 – Concrete Reinforcing

5. Section 03 30 00 – Cast-In-Place Concrete

6. Section 03 35 00 – Concrete Finishing

7. Section 03 40 00 – Precast Concrete

8. Section 26 05 23 – Underground Ducts and Raceways for Electrical Systems

2.04 CONTROLLED LOW-STRENGTH MATERIALS

A. Controlled Low-Strength Materials (CLSM) shall be self-compacting, cementitious backfill materials, which when hardened can be readily excavated by conventional mechanical equipment to access underground facilities. CLSM shall conform to ACI 229R-99 and as modified herein. CLSM shall consist of the following:

1. Portland Cement: ASTM C150-02, Type I or Type II.

2. Fly Ash (Optional): ASTM C618-03.

3. Aggregates: Aggregates conforming to ASTM C33-03 or aggregate material producing performance characteristics for CLSM, with a maximum size of 3/4 inch. Do not use material with clay fines.

4. Water: Free from rust and silt and taken from supply used for domestic purposes.

B. Proportioning and Mixing of CLSM:

1. The design mix shall be determined by the CLSM producer and HECO to meet work site conditions.

2. Water content shall be such that a uniform, flowable mixture is developed that is essentially self leveling when placed.

3. Compressive strength: 50 to 100 pounds per square inch (psi) at 28 days.

4. CLSM shall be batched by a ready-mix concrete plant and delivered to the work site by transit mixing trucks.

2.05 THERMAL CONCRETE

A. Thermal concrete is an engineered concrete mixture which, when solidified will develop into an efficient heat-conducting medium with the following specific thermal and mechanical properties:

1. Unconfined Compressive Strength: 28-day compressive strength shall be 3,000 psi.

2. Consistency: Workable, without segregation, with slump of 6 inches minimum, 7 inches maximum.

3. Thermal Resistivity: Range of 45 C-cm/W when moist to 70 C-cm/W when totally dry.

4. Density: Dry density of approximately 140 pounds per cubic foot (pcf).

5. Air Content: Shall not exceed 2 percent.

B. Thermal Concrete Proportioning and Mixing:

1. Design mixes are provided in the Design Plans.

2. The specific design mix used at each site shall be based on the results of the in-situ soil thermal resistivity tests and the cable ampacities required by HECO.

3. Do not use any other additives such as air entraining agent or water reducing agent to the mix without consulting with HECO.

4. Thermal concrete shall be batched at a central plant and supplied by ready-mix concrete trucks.

2.06 FLUIDIZED THERMAL BACKFILL

A. Fluidized Thermal Backfill (FTB) is an engineered slurry backfill mixture which, when solidified, will develop into an efficient heat conducting medium with the following specific thermal and mechanical properties:

1. Unconfined Compressive Strength: Hardened FTB shall be excavatable. 28-day compressive strength shall be 100 psi.
2. Consistency: Flow of 8 inches +/- 1/2 inch.
3. Thermal Resistivity: Range of 45 C-cm/W when moist to 110 C-cm/W when totally dry.
4. Density: Dry density of approximately 130 pcf.
5. Air Content: Shall not exceed two percent.

B. FTB Proportioning and Mixing:

1. Design mixes are provided in the Design Plans.
2. The specific design mix used at each site shall be based on the results of the in-situ soil thermal resistivity tests and the cable ampacities required by HECO.
3. Do not use any other additives such as air entraining agent or water-reducing agent to the mix without consulting with HECO.
4. FTB shall be batched at a central plant and supplied by ready-mix concrete trucks.

2.07 DUCTS AND CONDUITS

A. Plastic Conduits (PVC):

1. Direct Buried Conduits: Conduits for electric system shall be round-bore, PVC (polyvinyl chloride Schedule 40 or Schedule 80) plastic, or approved equivalent.
2. Concrete Encased Ducts: Ducts for electric system shall be round-bore, concrete-encased type, PVC Schedule 40 plastic or approved equivalent.
3. Conduit and Duct Accessories: Couplings, spacers, plugs, and accessories shall be as recommended by the manufacturer of conduits and ducts.

B. Steel Conduits: Rigid steel conduit, hot dipped galvanized inside and outside, conforming to UL 6, Standard for Electrical Rigid Metal Conduit – Steel and ANSI C80.1.

2.08 MANHOLES, HANDHOLES, AND VAULTS

A. Precast electric manholes, handholes, and vaults shall conform to standard drawings prepared by HECO and as specified in Part 2 of HECO Specification No. CS9401.

B. Frames and covers for electric manholes, handholes and vaults shall conform to the requirements specified in Part 2 of HECO Specification No. CS9401.

2.09 OVERHEAD DISTRIBUTION

A. Materials: All materials used for the relocation of NAVFAC-HAW 12 kV overhead facilities shall conform to UFGS Section 33 71 01 and as noted herein:

1. Poles: Class 3 minimum, penta-chlorohexane treated
2. Aerial Conductors: Copper #2 AWG, medium hard-drawn

3. Pole-line Hardware: Hot-dipped Galvanized

2.10 UNDERGROUND DISTRIBUTION

A. Material: All cables and splices used for the relocation of NAVFAC-HAW 12 kV underground distribution cables shall conform to UFGS Section 33 71 02.

1. Cable: 500 kcmil, 15 kV, EPR, 133% UGN application, 25% overlap tape shield

2. Splices: EPR to EPR shall be epoxy cast-type. For unlike cable types use splices suitable to type of cable insulation being spliced.

2.11 ACCESSORIES

A. Pulling Irons: Pulling irons and components, including internal and external nuts and u-bolts and plates of the u-bolt types of pulling eyes, shall be made of non-magnetic stainless steel conforming to ASTM A276-04, Type 316, or of other non-corrosive material approved by HECO. Welding of stainless steel items shall be performed per American Welding Society standards using an E316 electrode. When installed, the u-bolt assembly shall be watertight.

B. Pulling Ropes: Polyester muletape shall have a rated tensile strength of 1,800 pounds with 1-foot- interval markings (LH Dottie DWP 3001 or equivalent).

C. Electrical Detectable Warning Tape: Minimum thickness of 4 mils with a solid aluminum core or aluminum backing for detection with metal detector. Tape shall be 6 inches wide, red in color for electrical power lines, and imprinted with "CAUTION BURIED ELECTRIC LINE BELOW" in black lettering. For all HECO duct lines, provide electrical detectable warning tape in accordance with HECO Specification No. M0302 – Warning Tape for Underground Conduit Systems.

D. Sumps shall be centrally located under the manhole openings. Sumps shall be provided with removable, non-slip, non-corroding covers that safely cover the sump. (3/8-inch-thick pultruded vinylester floor plate with two each 1/2-inch-diameter holes, gray, fire-retardant, self-extinguishing, McNichols or approved by HECO).

E. Duct Connectors: Preformed plastic adapters shall be cast in the concrete walls to provide a smooth tight connection with incoming ducts (Bowco Industries duct terminators or approved by HECO).

F. Joint Sealant: Preformed flexible plastic gasket, conforming to AASHTO M 198, Type B.

G. Identification Imprint: Manhole covers, the tops of visible end walls of handholes, or the handhole covers (if end walls are too narrow or not visible) shall be imprinted with the letters below to identify the ownership of the structures.

Owning Company	Identifying Letters
Hawaiian Electric Company, Inc.	HECO

2.12 GROUNDING AND BONDING

A. Ground Rods: Two opposite corners of the electric manhole, handhole, or vault floor shall be provided with sealed holes through which 5/8-inch-diameter by 8-foot copper-cladded

steel core ground rods can be driven as needed and made watertight after driving is completed. Ground rods shall comply with UL 467.

PART 3 – EXECUTION

3.01 GENERAL REQUIREMENTS

A. Construction of HECO facilities shall be in accordance with the following HECO Specifications and Manual:

1. No. CS7001 Construction of Underground Facilities
2. No. CS7003 Construction of Electrical Facilities
3. No. CS7202 General Conditions for Construction of Projects
4. No. CS9301 Cast-in-Place Concrete Work
5. No. CS9401 Design and Construction of Precast Concrete Manholes, Handholes and Vaults
6. No. M0302 Warning Tape for Underground Conduit Systems
7. Electric Service Installation Manual

B. Construction of HECO facilities shall be in accordance with the following NESC Standards:

1. NESC Overhead Standards Book
2. NESC Underground Standards Book

3.02 EXCAVATION

A. Underground utilities indicated on the Design Plans are approximate in location. It is not the intention of the Design Plans to imply that all existing utilities are drawn and located. Coordinate locations of existing utilities prior to doing any excavation work. Report and pay for repair of damages to existing facilities and equipment.

B. For a scheduled excavation in the right-of-way, call the Hawaii One Call Center at 1-866-423-7287 at least 5 full working days in advance and as noted in the Design Plans. Undertake potholing operations to determine locations and depths of existing utilities where required for installation of underground utilities.

C. Exercise sound engineering and construction practices in excavating and maintaining excavations to ensure that no damage will occur to foundation structures, pole lines, pipelines, or other existing facilities. If as a result of the excavation there is potential for damage to other property, take immediate action to safeguard the property. No act or representation of instruction from the HART shall in any way relieve the Contractor from liability for damage or costs that result from excavation.

D. Trenches in existing improved streets, sidewalks, driveways, and paved roads shall not be opened more than 150 feet in advance of the duct or conduit laying, unless specifically authorized by the HART. In other areas, trenches shall not be opened for more than 200 feet. No jumping of excavation will be permitted.

E. Trenches shall be excavated for a minimum distance of 50 feet ahead of duct concreting operations, except at duct line terminations. This will allow for the gradual adjustment in the ductline to avoid any unanticipated obstruction. The profile grade may be adjusted by the HART to increase or decrease the excavation depth (up to 3 feet) as a result of the unforeseen obstruction at no additional cost to the contract.

F. Excavation for each manhole, handhole, vault, or service box, plus 50 feet of trenching for all ducts connected to these structures, shall be completed before construction is started on these structures.

G. All excavation shall be approved by the HART and respective utility company inspector before any ducts or conduits are placed or any structures and foundations are constructed.

H. Access to existing driveways, fire hydrants, and meters shall be provided at all times.

I. When unsuitable material is encountered at the excavation, the Contractor is responsible for hauling and properly disposing of the material. The HART shall determine if the excavated material is unsuitable. Depositing or storing broken concrete on the surface of streets, sidewalks, driveways, and planting strips will not be permitted.

J. If unforeseen pre-existing contamination is encountered during excavation, immediately notify the HART. Work in the area where suspected contamination is encountered shall be stopped until the nature of the contaminant has been determined by the HART and a Cleanup and Disposal Plan has been developed by the Contractor and approved by the HART (unless a Waste Handling Plan that adequately addresses management of contaminated soil during excavation has been previously submitted by the Contractor and approved by the HART). All workers handling, transporting, or disposing of hazardous materials shall be trained and certified as required by all applicable State and Federal environment and safely laws.

K. Additional Excavation:

1. When the subgrade material below the established trench structure or foundation grade is unsuitable (e.g., muck, buried debris, or adobe), excavate below grade to such depth and width as directed. The excavated area below grade shall be filled with approved aggregate in 6-inch compacted layers and brought up to within 3 inches of the grade of the bottom of direct buried ducts or conduits, or up to the grade of the bottom of concrete-encased ducts or conduits, structures, or foundations.

2. When water is encountered at the established grade for excavation for trenches or structures, the Contractor shall excavate to a depth 6 inches below required grade. This excavated area shall be filled with drainage fill consisting of a 4-inch bottom layer of No. 2B coarse rock (2 1/2 inches to 1 1/2 inches) and a 2-inch top layer of No. 3B fine rock (3/4 inch to 3/8 inch). A drain pipe of 3-inch duct shall be installed in the bottom layer if directed by the HART.

L. Overexcavation: Any part of the trench or excavation for structures or foundations excavated below the established grade or beyond the maximum permitted width, other than work under Article 3.01K herein, shall be refilled and compacted with select material by the Contractor at his expense.

M. Sheeting and Shoring: Whenever necessary, properly sheet and brace the open trench or structure excavation to render it safe and secure from possible slides and protect

personnel, existing improvements, and properties, and shall remove same before completing the backfill.

N. Dewatering: Trenches shall be kept free from water during installation and backfilling of all ducts, conduits, and structures. The Contractor may elect whatever method in dewatering the trench and shall be responsible for any damages to adjacent and surrounding properties resulting from the dewatering operation. Make arrangements to dispose of the water on or across public or private property. Dewatering procedures shall comply with all applicable Federal, State, and City and County ordinances and regulations concerning water pollution prior to its release into waterways or drainage systems.

3.03 PLACING AND COMPACTING BACKFILL

A. For direct buried ducts and conduits, the first lift shall be backfilled by hand shoveling and tamping so that the backfill material is in contact with the entire periphery of the duct or conduit. Water saturation is not permitted.

B. For the intermediate lift, backfill material shall be placed in horizontal uniform layers and thoroughly compacted by mechanical tamping in conformance with requirements of the City and County or the State of Hawaii.

C. A detectable warning tape shall be placed in the backfill in accordance with HECO Specification No. M0302.

D. Backfill material around manholes and other structures or foundations shall be placed in horizontal layers not more than 6 inches in compacted thickness. Each layer shall be compacted to at least 95 percent of the maximum dry density.

E. The surface 2-foot lift shall be placed and compacted in accordance with the City and County or the State of Hawaii's requirements for subbase course and aggregate base course.

F. All compaction tests required by the Federal government, State of Hawaii, and City and County shall be arranged and paid for by the Contractor.

G. Temporary Trench Patching:

1. To accommodate traffic immediately after backfilling the trench and prior to constructing permanent restoration, a temporary patch of cold-mix asphalt concrete shall be constructed over the compacted backfill. The cold-mix asphalt shall be compacted to a minimum thickness of 1 1/2 inches and slightly humped not to exceed 3/8 inch for trench width less than 2 feet, and 3/4 inch for trench width greater than 2 feet.

2. Maintain temporary trench patches in good condition at all times until permanent restoration is complete. Check holes and any depression greater than 1/2 inch shall be repaired immediately.

H. Reconditioning of Surfaces:

1. Unpaved Surfaces: Restore unpaved surfaces disturbed during installation of ducts and conduits to their original elevation and condition. Preserve sod and topsoil removed during excavation and reinstall after backfilling is completed. When the surface is disturbed in a newly seeded area, re-seed the restored surface with the same quantity

and formula of seed as used in the original seeding and provide topsoiling, fertilizing, liming, seeding, sodding, sprigging, or mulching.

2. Paving Repairs: Where trenches, pits, or other excavations are made in existing roadways and in other areas of pavement where surface treatment of any kind exists, restore the surface treatment or pavement to the same thickness and in the same kind as previously existed, except as otherwise specified, and to match and tie into adjacent and surrounding existing surfaces.

3. Permanent restoration work shall be done in conformance with requirements of the City and County or the State of Hawaii Department of Transportation (HDOT).

3.04 CONDUIT INSTALLATION

A. Conduit installation shall commence only after trench is inspected and approved by HECO inspector. Minimum depths to the top of the conduit shall be in accordance with NFPA 70 and IEEE C2. Refer to the construction notes in the Design Plans for the inspector contact information and amount of working days required for advance notification of inspection services.

B. Polyvinyl Chloride (PVC) Conduit Runs:

1. Changes in direction shall not exceed 4 degrees per length of conduit or duct. Radii and turns shall be made with appropriate duct bends and sweeps. Horizontal bend shall be constructed with 25-foot minimum radius curves unless indicated otherwise and approved by the respective utility company inspector or for NAVFAC-HAW electrical duct banks, by HART's inspector. Vertical bends shall be constructed with 20-foot minimum radius curves unless indicated otherwise and approved by the respective utility company inspector or for NAVFAC-HAW electrical duct banks, by HART's inspector.

2. Arrange conduits as shown on the Design Plans using conduit spacers as required.
   a. Stagger conduit joints by rows and layers to provide a duct line having maximum strength.
   b. Separate conduits by the minimum concrete thickness indicated on the Design Plans.
   c. Consider the bending radii indicated on Design Plans and specified herein as minimums, unless otherwise noted.
   d. Make minor changes in location or cross-section as necessary to avoid obstructions or conflicts.
   e. Where conduit in a ductbank terminates in a building, install the conduit under the building as a continuous ductbank.
   f. Where conduit runs cannot be installed as shown because of conditions not discoverable prior to trenching, refer the condition to the HART for direction before further work is performed.

3. Minimum permissible utility riser bend radius is 36 inches using factory manufactured bends only.

C. Conduit Drainage:

1. Whenever possible, all conduits shall be installed with no "pockets" in the conduit run by maintaining a uniform grade of at least 0.25 percent for drainage toward manhole, handhole, vault, or service box.

2. All work must be done in the dry. If water is encountered during construction, provide appropriate drainage.

D. Treatment:

1. Conduits shall be kept clean of concrete, dirt, or foreign substances during construction.

2. Field cuts requiring tapers shall be made with proper tools and shall match factory tapers. A coupling recommended by the conduit manufacturer shall be used wherever an existing conduit is connected to a conduit of different material or shape.

3. Conduits shall be stored to avoid warping and deterioration, with ends sufficiently plugged to prevent entry of any water or solid substances. Conduits shall be thoroughly cleaned before being laid. Plastic conduits shall be stored on a flat surface and protected from the direct rays of the sun.

E. Conduit Cleaning:

1. As each conduit run is completed, for conduit sizes 3 inches and larger draw a stiff bristle brush through until conduit is clear of particles of earth, sand and gravel. Then draw a flexible testing mandrel approximately 12 inches long with a diameter less than the inside diameter of the conduit through the conduit; then immediately install conduit plugs.

2. For conduit sizes less than 3 inches, draw a stiff bristle brush through until conduit is clear of particles of earth, sand and gravel; then immediately install conduit plugs.

F. Multiple Conduits:

1. Separate multiple conduits by a minimum distance of 2 inches, except that light and power conduits shall be separated from control, signal, and telecommunication conduits by a minimum distance of 3 inches.

2. Stagger the joints of the conduits by rows (horizontally) and layers (vertically) to strengthen the conduit assembly. Provide plastic conduit spacers that interlock vertically and horizontally. Spacer assembly shall consist of base spacers, intermediate spacers, ties, and locking device on top to provide a completely enclosed and locked-in conduit assembly.

3. Install spacers per manufacturer's instructions, but provide a minimum of two spacer assemblies per 8 feet of conduit assembly for conduits up to 3 inches in diameter, and two spacer assemblies per 6 feet of conduit assembly for conduits 4 inches and greater in diameter.

G. Conduit Plugs and Pull Rope:

1. New conduit indicated as being unused or empty shall be provided with plugs on each end. Plugs shall contain a weephole or screen to allow water drainage.

2. Provide a plastic pull rope with 3 feet of slack at each end of unused or empty conduits.

H. Encasement under Roads:

1. Under roads and paved areas, install conduits in concrete encasement of rectangular cross-section providing a minimum of 3 inches of concrete cover around conduits.

2. Concrete encasement shall extend at least 5 feet beyond the edges of paved areas and roads.

I. Conduit Encased in Concrete:

1. Construct underground duct lines of individual conduits encased in concrete. Do not mix different kinds of conduit in any one duct bank.

2. Concrete encasement surround the bank shall be rectangular in cross-section and shall provide a minimum of 3 inches of concrete cover around conduits.

3. Separate conduits by a minimum concrete thickness of 2 inches, except separate light and power conduits from control, signal, and telecommunication conduits by a minimum concrete thickness of 3 inches.

4. Before pouring concrete, anchor duct bank assemblies to prevent assemblies from floating during concrete pouring. Anchoring shall be done by driving reinforcing rods adjacent to duct spacer assemblies and attaching the rods to the spacer assembly.

J. Connection to Manholes:

1. Duct bank envelopes connecting to underground structures shall be flared, to have an enlarged cross-section at the manhole entrance to provide additional shear strength.

2. Dimensions of the flared cross-section shall be larger than the corresponding manhole opening dimensions by no less than 12 inches in each direction. The perimeter of the duct bank opening in the underground structure shall be flared toward the inside or keyed to provide a positive interlock between the duct bank and the wall of the structure.

3. Use vibrators when this portion of the encasement is poured, to ensure a seal between the envelope and the wall of the structure.

K. Connection to Existing Underground Structures:

1. For duct bank connections to existing structures, break the structure wall out to the dimensions required and preserve steel in the structure wall.

2. Cut steel and bend out to tie into the reinforcing of the duct bank envelope.

3. Chip the perimeter surface of the duct bank opening to form a key or flared surface, providing a positive connection with the duct bank envelope.

L. Connection to Existing Ducts:

1. Where connections to existing duct banks are indicated, excavate the banks to the maximum depth necessary.

2. Cut off the banks and remove loose concrete from the conduits before new concrete-encased ducts are installed. Provide a reinforced concrete collar, poured monolithically with the new duct bank, to take the shear at the joint of the duct banks.

3. Remove all existing ducts that will no longer be used.

M. Removal of Ducts:

1. Where duct lines are removed from existing underground structures, close the openings to waterproof the structure.

2. Chip out the wall opening to provide a key for the new section of wall.

N. Mandrel Testing:

1. Pass a test mandrel conforming to the respective utility companies, NAVFAC-HAW requirements, through the entire length of each conduit of the ductbank to test for burrs and obstructions. Unless indicated otherwise, mandrel shall be 14 inches long and shall have a diameter of ½" less than the inside diameter of the conduit.

2. Mandrel ductbanks containing conduits prior to and after concrete encasement but before backfilling. Should mandrel testing reveal obstructions and/or burrs, replace the damaged section of ductback, at no additional cost to the Project, prior to proceeding with the next construction activity.

3. Final mandrel testing is required before acceptance of any ductbank. All deficient items indicated by the utility company's, NAVFAC-HAW and HART's inspector shall be repaired and.or replaced to the satisfaction of the respective inspectors at no additional cost to the Project.

3.05 CONCRETE WORK

A. Provide concrete in accordance with Sections 03 11 00 – Concrete Forming, 03 15 00 – Concrete Accessories, 03 20 00 – Concrete Reinforcing, and 03 30 00 – Cast-In-Place Concrete.

B. Provide concrete finish in accordance with Section 03 35 00 – Concrete Finishing.

3.06 CONTROLLED LOW-STRENGTH MATERIALS INSTALLATION

A. Trench shall be free of all debris and free of standing water before Controlled Low-Strength Materials (CLSM) are placed.

B. CLSM shall be placed to the designated fill line without vibration of other means of compaction. Placing CLSM shall be by chute, pumping, or other approved methods. During placement operations around manholes, handholes, vaults, or underground structures, care shall be used to avoid dislocating any part of the structure, conduit, or adjacent utilities due to fluid pressure from the CLSM.

C. All structures or pipes within the backfill area shall be secured to avoid the buoyant effect of CLSM if necessary. Care shall be taken to ensure tight seals to avoid infiltration into pipelines, structures, and other areas not intended to receive flowable fill.

D. All CLSM fill areas subjected to traffic loads shall have durable riding surfaces before pavement is placed. No curing protection is required.

E. Where CLSM is used for direct buried conduits applications, place a detectable warning tape 1 foot above the top of direct-buried conduits.

F. Field Testing: Conduct testing and submit reports for the following:

1. Consistency Test: In accordance with ASTM D6103-97; one test for each day's pour.

2. Strength Test: In accordance with ASTM D4832-02; one set of three cylinders for each 100 cubic yards or fraction thereof placed in any one day.

3.07 THERMAL CONCRETE AND FLUIDIZED THERMAL BACKFILL INSTALLATION

A. Install thermal concrete and Fluidized Thermal Backfill (FTB) where shown in the Design Plans, to encase conduits where required for heat dissipation.

B. The HECO Inspector shall be notified 3 working days before placing thermal concrete and FTB. Thermal concrete and FTB shall be placed only in the presence of the HECO Inspector.

C. Trench shall be free of all debris and standing water before thermal concrete and FTB is placed.

D. Thermal concrete and FTB shall be supplied and transported in a way that minimizes segregation and facilitates installation. Thermal concrete and FTB shall be poured or pumped into the trench and shall completely fill all voids without causing segregation. Flow requirements may have to be adjusted for installations using pumps.

E. If trenches are shored or bulkheads are used on sloping ground, the shoring shall be lifted no later than 1 hour after the FTB is poured while the FTB is still in a semi-fluid state. FTB should not be allowed to develop cracks. If cracks or voids are found to exist, they shall be filled by pouring additional FTB.

F. Bleed Water: In poorly draining native soils, provisions shall be made to allow excess bleed water to drain away or be pumped away.

G. Field Testing: Conduct testing and submit reports for the following (cost of all testing shall be borne by the Contractor):

1. Consistency (Flow Test): Conform to ASTM C143-03; one test when a set of strength test cylinders is prepared.

2. Thermal Resistivity (Thermal Probe Test): Conduct thermal resistivity test using Geotherm TPA-7000 equipment in accordance with IEEE 442 and ICC guidelines for the transient thermal probe test. Two cylinders for thermal testing shall be prepared each time strength cylinders are taken. Tests shall be conducted on a sample cured for 4 days and on a sample totally dried in an oven at 105 degrees C.

3. Air Content: Conduct air content test per ASTM C231-03 when a set of compressive strength test cylinders is prepared.

4. Unconfined Compressive Strength: A set of three cylinders shall be prepared per ASTM C31-03 for each day's pour, plus additional sets for each 100 cubic yards or fraction thereof. Conduct compressive strength tests on each set: one at 7 days and two at 28 days per ASTM C39-03.

3.08 PRECAST MANHOLE, HANDHOLE, AND VAULT INSTALLATION

A. Precast structures shall be installed in accordance with the provisions of ASTM C891-90.

3.09 OVERHEAD DISTRIBUTION SYSTEM

A. Installation of NAVFAC-HAW overhead distribution lines and equipment shall conform to UFGS Section 33 71 01.

3.10 UNDERGROUND DISTRIBUTION SYSTEM

A. Installation of NAVFAC-HAW underground distribution lines shall conform to UFGS Section 33 71 02.

3.11 GROUNDING SYSTEM

A. Provide ground rods as indicated in accordance with NFPA 70 and IEEE C2, and as specified herein. Ground rods shall have a maximum resistance to solid earth ground not exceeding 5 ohms.

B. Provide cone pointed driven ground rods driven to depth noted on plans. If the specified ground resistance is not met, an additional ground rod shall be provided in accordance with the requirements of NFPA 70 (placed not less than 6 feet from the first rod).

END OF SECTION

SECTION 33 80 00
COMMUNICATION UTILITIES

PART 1 – GENERAL

1.01 SUMMARY

A. Description:

1. This Section includes work and coordination required for relocation of existing Hawaiian Telcom, Inc. (HTI) and Wavecom Inc. (WCI) facilities and provision of new HTI communication services to transit facilities. In general, the proposed underground infrastructure must be in place in order for the telecommunications provider to relocate their existing facilities. Provide complete underground utility support structures to be used for HTI and WCI cables and equipment. Coordinate work with and arrange for periodic inspections by HTI. (Wavecom Inc. is the successor to Pacific LightNet Inc. and is a wholly-owned subsidiary of Hawaiian Telcom Inc.)

2. Work and coordination required for relocation of existing Oceanic Time Warner Cable (OTWC) facilities and provision of new OTWC communication services to transit facilities. In general, the proposed underground infrastructure must be in place in order for the telecommunications provider to relocate their existing facilities. Provide complete underground utility support structures to be used for OTWC cables and equipment. Coordinate work with and arrange for periodic inspections by OTWC.

3. Work and coordination required for relocation of existing AT&T Corporation and AT&T Government Solutions (AT&T) facilities. In general, the proposed underground infrastructure must be in place in order for the telecommunications provider to relocate their existing facilities. Provide complete underground utility support structures to be used for AT&T cables and equipment. Coordinate work with and arrange for periodic inspections by AT&T. An AT&T approved contractor shall be retained under this construction contract to install and splice all new cables and remove abandoned cables. The current list of AT&T approved contractors is Choy Enterprises Incorporated (808-469-4607), Henkels and McCoy (808-455-1310) and Verizon Federal (808-484-7990). An AT&T approved contractor shall be retained under this construction contract to install intercept manholes (maintenance holes) around "live" AT&T cables. The current AT&T approved contractor is Henkels and McCoy (808-455-1310).

4. Work and coordination required for relocation of existing Network Enterprise Center Hawaii(NEC-HI; a.k.a. Army Signal Corps) facilities. Provide complete underground utility support structures and cables for relocation of existing NEC-HI facilities. Coordinate work with and arrange for periodic inspections by NEC-HI.

5. Work and coordination required for relocation of existing Sandwich Isles Communications (SIC), Inc. facilities. In general, the proposed underground infrastructure must be in place in order for the telecommunications provider to relocate their existing facilities. Where existing SIC duct systems are impacted by the guideway construction, provide complete underground utility support structures to be

used for SIC cables and equipment. Coordinate work with and arrange for periodic inspections by SIC.

6. Work and coordination required for relocation of existing Naval Computer and Telephone Master Station (NCTAMS) facilities. Provide complete underground utility support structures and cables for relocation of existing NCTAMS facilities. Coordinate work with and arrange for periodic inspections by NCTAMS.

7. Work and coordination required for relocation of existing TW Telecom (TWTC), Inc. facilities. In general, the proposed underground infrastructure must be in place in order for the telecommunications provider to relocate their existing facilities. Provide complete underground utility support structures to be used for TWTC cables and equipment. Coordinate work with and arrange for periodic inspections by TWTC.

8. Work by Others:
   a. Hawaiian Telcom, Inc.and WaveCom Inc.:
      1) Overhead-to-Underground and Underground-to-Underground Relocation: HTI to install and splice all new cables and remove abandoned cables.
      2) Overhead-to-Overhead Relocation: HTI to install and splice all new cables and remove abandoned cables. Placement of joint utility poles will be by Hawaiian Electric Company. Placement of poles solely for use by communications cables will be by HTI.
   b. Oceanic Time Warner Cable:
      1) Overhead-to-Underground and Underground-to-Underground Relocation: OTWC to install and splice all new cables and remove abandoned cables.
      2) Overhead-to-Overhead Relocation: OTWC to install and splice all new cables and remove abandoned cables.
   c. AT&T Corporation:
      1) Underground-to-Underground Relocation: AT&T or its approved contractor to install and splice new cables, remove abandoned cables and install structures around "live" cable facilities.
   d. Sandwich Isles Communications, Inc.:
      1) Underground-to-Underground Relocation: SIC to install and splice all new cables and remove abandoned cables.
   e. TW Telecom, Inc.:
      1) Overhead-to-Underground and Underground-to-Underground Relocation: TWTC to install and splice all new cables and remove abandoned cables.
      2) Overhead-to-Overhead Relocation: TWTC to install and splice all new cables and remove abandoned cables.

B. Section Includes:

1. Excavation and Backfill

2. Placing and Compacting Backfill

3. Installation

4. Field Quality Control

C. Related Sections:

1. Section 03 05 15 – Portland Cement Concrete
2. Section 03 11 00 – Concrete Forming
3. Section 03 15 00 – Concrete Accessories
4. Section 03 20 00 – Concrete Reinforcing
5. Section 03 30 00 – Cast-In-Place Concrete
6. Section 03 35 00 – Concrete Finishing
7. Section 03 40 00 – Precast Concrete

1.02 REFERENCES

A. ASTM International (ASTM):

1. ASTM A123 — Standard Specification for Zinc (Hot-Dip Galvanized) Coatings on Iron and Steel Products
2. ASTM B3 — Standard Specification for Soft or Annealed Copper Wire
3. ASTM C33 — Standard Specification for Concrete Aggregates

B. AT&T Corporation:

1. Standard Specifications and Practices
2. Government Solutions Standard Specifications and Practices

C. Hawaii Administrative Rules (HAR):

1. HAR Chapter 6-73 — Installation, Operations, and Maintenance of Overhead and Underground Electrical Supply and Communication Lines

D. Hawaiian Telcom Standard Specifications for PlacingTelephone Systems, dated January 2007

E. Oceanic Time Warner Cable Standard Specifications and Practices

F. Sandwich Isles Communications Standard Specifications and Practices

G. State of Hawaii Standard Specifications (HSS):

1. HSS Section 204 — Excavation and Backfill for Miscellaneous Facilities

H. TW Telecom Standard Specifications and Practices

I. Underwriters Laboratories (UL):

1. UL 467 — Grounding and Bonding Equipment

J. U.S. Department of Defense:

1. Unified Facilities Guide Specifications (UFGS) 33 82 00 – Telecommunications Outside Plant (OSP)

2. Army Corps of Engineers Installation Information Infrastructure Architecture (I3A) Guide

1.03 SUBMITTALS

A. General: Refer to Section 7.7 – Submittal Procedures, and Section 7.8 – Shop Drawings, Product Data, and Samples, for submittal requirements and procedures.

B. Shop Drawings: Submit fabrication drawings of precast concrete handholes and manholes proposed for use by the Contractor.

C. Product Data: Submit manufacturer's product data for proposed ducts and conduits.

D. Certification: Where precast concrete handhole and manholes are to be used in areas exposed to traffic, submit certification that the design of the precast handhole and manhole meets requirements for AASHTO HS20 loading.

E. Record Drawings: Submit final as-built information with reference stationing, offset, and depth in accordance with the requirements of utility agencies or companies.

1.04 QUALITY ASSURANCE

A. General: Refer to Section 7.10 – Quality Assurance, for quality assurance requirements and procedures.

B. The Contractor and its key personnel conducting the relocation of NEC-HI underground utility support structures and cables shall be approved by NEC-HI. Choy Enterprises, Verizon Federal and Henkels & McCoy are qualified by NEC-HI for this Work. If the Contractor elects to use a subcontractor other than those that are pre-qualified, the qualification requirements indicated in Unified Facilities Guide Specifications (UFGS) 33 82 00, Article 1.6.2 must be met.

PART 2 – PRODUCTS

2.01 BEDDING FOR UNDERGROUND STRUCTURES

A. Service Boxes and Structures without Bottom Slabs (Open Base): 4-inch-minimum thickness of No. 3 fine gravel. ASTM C33-03, No. 67.

B. Underground Structures with Bottom Slabs (Closed Base): 4-inch-minimum thickness of clean, well-graded granular material with a maximum particle size of 3 inches and less than 3 percent passing the No. 200 sieve or select borrow.

2.02 BACKFILL

A. Material: Conform to HSS Subsection 204.02 – Materials.

2.03 CAST-IN-PLACE CONCRETE STRUCTURES

A. Materials: Conform to Section 03 05 15 – Portland Cement Concrete, Section 03 11 00 – Concrete Forming, Section 03 15 00 – Concrete Accessories, Section 03 20 00 – Concrete

Reinforcing, Section 03 30 00 – Cast-In-Place Concrete, and Section 03 35 00 – Concrete Finishing.

2.04 PRECAST CONCRETE STRUCTURES

A. Materials: Conform to Section 03 05 15 – Portland Cement Concrete, Section 03 11 00 – Concrete Forming, Section 03 15 00 – Concrete Accessories, Section 03 20 00 – Concrete Reinforcing, Section 03 35 00 – Concrete Finishing, and Section 03 40 00 – Precast Concrete.

2.05 MANHOLE FRAME AND COVER

A. Materials: Cast iron, fabricated in accordance with the standard drawings of the respective communications utility owners.

2.06 HANDHOLE AND MANHOLE HARDWARE

A. Materials: Steel, hot-dipped galvanized in conformance with ASTM A123, fabricated in accordance with the standard drawings of the respective communications utility owners.

2.07 GROUNDING MATERIALS

A. Materials: Conform to UL 467 and the following: For Hawaiian Telcom, 5/8-inch-diameter by 8-foot-long galvanized steel ground rods are required. For all other communications utility companies, minimum 5/8-inch-diameter by 10-foot-long copper-clad steel ground rods are required. Bare copper conductors shall be #4 AWG minimum conforming to ASTM B3, stranded, annealed copper.

2.08 CONDUITS AND DUCTS

A. Materials: Provide polyvinyl chloride (PVC) Schedule 40 or approved equal, UL listed. Couplings, bends, and sweeps shall be suitable for use with PVC Schedule 40 conduit or the approved equal conduit material. For AT&T duct lines, provide three 2-inch high density polyethylene (HDPE) SDR-11 conduits and one 2-inch toneable HDPE SDR-11 conduit.

2.09 NETWORK ENTERPRISE COMMAND HAWAII (NEC-HI) CABLES

A. Materials: Conform to UFGS 33 82 00 Part 2 – Products.

2.10 NAVAL COMPUTER AND TELEPHONE AREA MASTER STATION (NCTAMS) CABLES

A. Materials: Conform to UFGS 33 82 00 Part 2 – Products

PART 3 – EXECUTION

3.01 EXCAVATION AND BACKFILL

A. Underground utilities indicated in the Design Plans are approximate in location. It is not the intention to imply that all existing utilities are in the Design Plans. Coordinate locations of existing utilities prior to doing any excavation work. Report and pay for

damages to existing facilities and equipment in accordance with the utility owners' policies.

B. For a scheduled excavation in the right-of-way, call the Hawaii One Call Center at 1-866-423-7287 at least 5 full working days in advance and as noted in the Contract Documents. Also undertake potholing operations, to determine locations and depths of existing utilities where required for installation of underground utilities.

C. Excavation and backfill for telecommunications manholes, handholes, service boxes, and duct lines shall be in accordance with HSS Subsection 204.03 – Construction and Specification Section 31 20 00 Earthmoving.

D. Exercise sound engineering and construction practices in excavating and maintaining excavations to ensure that no damage will occur to foundation structures, pole lines, pipelines, or other existing facilities. If as a result of the excavation there is potential for damage to other property, take immediate action to safeguard the property. No act or representation of instruction from HART shall in any way relieve the Contractor from liability for damage or costs that result from excavation.

E. Trenches in existing improved streets, sidewalks, driveways, and paved roads shall not be opened more than 150 feet in advance of the duct or conduit laying, unless specifically authorized by HART. In other areas, trenches shall not be opened for more than 200 feet. No jumping of excavation will be permitted.

F. Trenches shall be excavated for a minimum distance of 50 feet ahead of duct concreting operations, except at duct line terminations. This will allow for the gradual adjustment in the ductline to avoid any unanticipated obstruction. The profile grade may be adjusted by HART to increase or decrease the excavation depth (up to 3 feet) as a result of the unforeseen obstruction at no additional cost to the contract.

G. Excavation for each manhole, handhole, vault, or service box, plus 50 feet of trenching for all ducts connected to these structures, shall be completed before construction is started on these structures.

H. All excavation shall be approved by HART and respective utility company inspector before any ducts or conduits are placed or any structures and foundations are constructed.

I. Access to existing driveways, fire hydrants, and meters shall be provided at all times.

J. When unsuitable material is encountered at the excavation, the Contractor is responsible for hauling and properly disposing of the material. HART shall determine if the excavated material is unsuitable. Depositing or storing broken concrete on the surface of streets, sidewalks, driveways, and planting strips will not be permitted.

K. If unforeseen pre-existing contamination is encountered during excavation, immediately notify HART. Work in the area where suspected contamination is encountered shall be stopped until the nature of the contaminant has been determined by HART and a Cleanup and Disposal Plan has been developed by the Contractor and approved by HART (unless a Waste Handling Plan that adequately addresses management of contaminated soil during excavation has been previously submitted by the Contractor and approved by HART). All workers handling, transporting, or disposing of hazardous materials shall be trained and certified as required by all applicable State and Federal environment and safely laws.

L. Additional Excavation:

1. When the subgrade material below the established trench structure or foundation grade is unsuitable (e.g., muck, buried debris, or adobe), excavate below grade to such depth and width as directed. The excavated area below grade shall be filled with approved aggregate in 6-inch compacted layers and brought up to within 3 inches of the grade of the bottom of direct buried ducts or conduits, or up to the grade of the bottom of concrete-encased ducts or conduits, structures, or foundations.

2. When water is encountered at the established grade for excavation for trenches or structures, the Contractor shall excavate to a depth 6 inches below required grade. This excavated area shall be filled with drainage fill consisting of a 4-inch bottom layer of No. 2B coarse rock (2 1/2 inches to 1 1/2 inches) and a 2-inch top layer of No. 3B fine rock (3/4 inch to 3/8 inch). A drain pipe of 3-inch duct shall be installed in the bottom layer if directed by HART.

M. Overexcavation: Any part of the trench or excavation for structures or foundations excavated below the established grade or beyond the maximum permitted width, other than work under Article 3.01K herein, shall be refilled and compacted with select material by the Contractor at his expense.

N. Sheeting and Shoring: Whenever necessary, properly sheet and brace the open trench or structure excavation to render it safe and secure from possible slides and protect personnel, existing improvements, and properties, and shall remove same before completing the backfill.

O. Dewatering: Dewatering shall comply with Specification 31 23 19. In addition, trenches shall be kept free from water during installation and backfilling of all ducts, conduits, and structures. The Contractor may elect whatever method in dewatering the trench and shall be responsible for any damages to adjacent and surrounding properties resulting from the dewatering operation. Make arrangements to dispose of the water on or across public or private property. Dewatering procedures shall comply with all applicable Federal, State, and City and County ordinances and regulations concerning water pollution prior to its release into waterways or drainage systems..

3.02 PLACING AND COMPACTING BACKFILL

A. For direct buried ducts and conduits, the first lift shall be backfilled by hand shoveling and tamping so that the backfill material is in contact with the entire periphery of the duct or conduit. Water saturation is not permitted.

B. For the intermediate lift, backfill material shall be placed in horizontal uniform layers and thoroughly compacted by mechanical tamping in conformance with requirements of the City and County or the State of Hawaii.

C. A detectable warning tape shall be placed in the backfill in accordance with HTCO, OTWC, SIC, AT&T and Federal Specifications, as applicable .

D. Backfill material around manholes and other structures or foundations shall be placed in horizontal layers not more than 6 inches in compacted thickness. Each layer shall be compacted to at least 95 percent of the maximum dry density.

E. The surface 2-foot lift shall be placed and compacted in accordance with the City and County or the State of Hawaii's requirements for subbase course and aggregate base course.

F. All compaction tests required by the Federal government, State of Hawaii, and City and County shall be arranged and paid for by the Contractor.

G. Temporary Trench Patching:

1. To accommodate traffic immediately after backfilling the trench and prior to constructing permanent restoration, a temporary patch of cold-mix asphalt concrete shall be constructed over the compacted backfill. The cold-mix asphalt shall be compacted to a minimum thickness of 1 1/2 inches and slightly humped not to exceed 3/8 inch for trench width less than 2 feet, and 3/4 inch for trench width greater than 2 feet.

2. Maintain temporary trench patches in good condition at all times until permanent restoration is complete. Check holes and any depression greater than 1/2 inch shall be repaired immediately.

H. Reconditioning of Surfaces:

1. Unpaved Surfaces: Restore unpaved surfaces disturbed during installation of ducts and conduits to their original elevation and condition. Preserve sod and topsoil removed during excavation and reinstall after backfilling is completed. When the surface is disturbed in a newly seeded area, re-seed the restored surface with the same quantity and formula of seed as used in the original seeding and provide topsoiling, fertilizing, liming, seeding, sodding, sprigging, or mulching.

2. Paving Repairs: Where trenches, pits, or other excavations are made in existing roadways and in other areas of pavement where surface treatment of any kind exists, restore the surface treatment or pavement to the same thickness and in the same kind as previously existed, except as otherwise specified, and to match and tie into adjacent and surrounding existing surfaces.

Permanent restoration work shall be done in conformance with requirements of the City and County or the State of Hawaii Department of Transportation (HDOT).

3.03 INSTALLATION

A. Construct duct system in accordance with the standard specifications and practices of the respective communications utility companies, U.S. Department of Defense UFGS 33 82 00 and Army Corps of Engineers I3A Guide, and HAR Chapter 6-73 and to the satisfaction of their respective construction inspectors.

B. Polyvinyl Chloride (PVC) Conduit Runs:

1. Changes in direction shall not exceed 4 degrees per length of conduit or duct. Radii and turns shall be made with appropriate duct bends and sweeps. Horizontal bend shall be constructed with 25-foot minimum radius curves unless indicated otherwise and approved by the respective utility company inspector or for NCTAMS duct banks, by HART's inspector. Vertical bends shall be constructed with 20-foot minimum radius curves unless indicated otherwise and approved by the respective utility company inspector or for NCTAMS duct banks, by HART's inspector.

2. Arrange conduits as shown on the Design Plans using conduit spacers as required.
   a. Stagger conduit joints by rows and layers to provide a duct line having maximum strength.
   b. Separate conduits by the minimum concrete thickness indicated on the Design Plans.
   c. Consider the bending radii indicated on Design Plans and specified herein as minimums, unless otherwise noted.
   d. Make minor changes in location or cross-section as necessary to avoid obstructions or conflicts.
   e. Where conduit in a ductbank terminates in a building, install the conduit under the building as a continuous ductbank.
   f. Where conduit runs cannot be installed as shown because of conditions not discoverable prior to trenching, refer the condition to the HART for direction before further work is performed.

C. Minimum permissible utility riser bend radius is 36 inches using factory manufactured bends only.

D. For AT&T duct lines, confirm continuity on the toneable HDPE conduit from manhole to manhole. When installing the toneable HDPE conduit, pull the conduit approximately 5 feet inside of the manhole, peel back the locator wire the entire 5 feet, and turn and "j" hook it to the inside wall. At the end of the locator wire, leave a 1-inch loop to attach the locator equipment. Cut the conduit 18 inches from the inside wall of the manhole.

E. Construct handholes and manholes in accordance with the standard specifications and practices of the respective communications utility companies, U.S. Department of Defense UFGS 33 82 00 and Army Corps of Engineers I3A Guide, and HAR Chapter 6-73 and to the satisfaction of their respective construction inspectors. Concrete shall be mechanically vibrated thoroughly, during and after the concrete pour. Demolish and replace walls, handholes, and manholes condemned by the respective inspectors at no additional cost to the HART.

F. Provide concrete encasement over and around all duct banks except for the AT&T direct-buried HDPE conduits (see Design Plans for concrete slab protection over the AT&T direct-buried conduits where there is less than 42 inches of cover over the conduits). Pour concrete only after the trench and duct installation have been mandrel tested, inspected, and approved by the respective communication utility owners' inspectors. Limit free drop of concrete to 5 feet above the lowest point of the utility trench, unless approved otherwise by the inspector. Use a spatula or splicing bar to ensure against voids in the concrete, and where conduits are stacked three ducts or higher, use a mechanical vibrator.

G. Mandrel test all conduits with a mandrel of dimensions acceptable to the respective communications utility owners, and replace any damaged, obstructed or deformed segments of conduit at no additional cost to the HART. Provide duct measuring/cable nylon pulling tape of minimum 1,800-pound pulling strength through each conduit. Measure at least one duct of a common duct run and record the distance on a work site as-built copy of the Design Plans. Provide sufficient copies of the annotated work site Design Plans to provide one copy to each communications utility company that has duct lines constructed by the Contractor.

1. Mandrel for HTI shall be a solid block mandrel not less than 12 inches long and shall have a diameter ¼" less than the inside diameter of the conduit. In addition to testing each HTI duct with the block mandrel, a brush with stiff bristles shall be subsequently pulled through each conduit to make certain that no particles of earth, sand or gravel have been left in the ductline. With the approval of the HTI inspector and concurrence of HART, a disk-flex mandrel may be used for all conduits measuring 2" diameter or less.

2. Mandrel ductbanks containing conduits prior to and after concrete encasement but before backfilling. Should mandrel testing reveal obstructions and/or burrs, replace the damaged section of ductback, at no additional cost to the Project, prior to proceeding with the next construction activity.

3. Final mandrel testing is required before acceptance of any ductbank. All deficient items indicated by the utility company's, NCTAMS and HART's inspector shall be repaired and.or replaced to the satisfaction of the respective inspectors at no additional cost to the Project.

H. Warning Tape: Provide non-detectable warning tape over AT&T Corporation ductlines. Provide detectable warning tape in accordance with the requirements specified in Section 31 20 00 – Earth Moving and as specified herein:

1. A.4-inch-wide, traceable, orange warning tape with the following message imprinted in black: "WARNING—STOP DIGGING—COMMUNICATIONS CABLE BURIED BELOW, FAILURE TO COMPLY WILL RESULT IN LEGAL ACTION," or a similar message as indicated in the respective utility owners' standard specifications.

2. Orange warning tape for Hawaiian Telcom shall be imprinted with the following message: "WARNING – STOP DIGGING – CALL HAWAIIAN TELCOM, COMMUNICATIONS CABLE BURIED BELOW, FAILURE TO COMPLY COULD RESULT IN LEGAL ACTION." Place all warning tape 12 inches below finish grade over the entire length of the concrete encased ductbank installation. See Hawaiian Telcom's Standard Drawing 34028.

3. A.4-inch-wide, traceable, orange warning tape with the following message imprinted in black: "CAUTION—BURIED CABLE BELOW", shall be placed 12 inches below finish grade over the entire length of direct buried cable television ducts and the entire length of the concrete encased ductbank installation containing cable television ducts.

I. Cast-in-Place Concrete Structures: Provide formwork, steel reinforcement, and concrete in accordance with Section 03 05 15 – Portland Cement Concrete, Section 03 11 00 – Concrete Forming, Section 03 15 00 – Concrete Accessories, Section 03 20 00 – Concrete Reinforcing, Section 03 30 00 – Cast-In-Place Concrete, and Section 03 35 00 – Concrete Finishing.

J. Precast Concrete Structures: Furnish in accordance with Section 03 05 15 – Portland Cement Concrete, Section 03 11 00 – Concrete Forming, Section 03 15 00 – Concrete Accessories, Section 03 20 00 – Concrete Reinforcing, Section 03 35 00 – Concrete Finishing, and Section 03 40 00 – Precast Concrete. Install as indicated and in accordance with the manufacturer's recommendations. Provide appurtenances and accessories, including sealants, masonry and cement mortar, as required for a complete installation.

K. Network Enterprise Technology Center Command (NEC-HI) Cables: Install and splice NEC-HI cables in accordance with UFGS 33 82 00 Part 3 – Execution.

L. Naval Computer and Telephone Area Master Station (NCTAMS) Cables: Install and splice cables in accordance with UFGS 33 82 00 Part 3 – Execution.

3.04 FIELD QUALITY CONTROL

A. Cleaning and Repairing:

1. During progress of work, all rubbish, waste lumber, and displaced material shall be removed as soon as possible. Upon completion of work, remove from the HART's property and from all public and private property, at the Contractor's expense, all temporary structures, rubbish, and waste material resulting from operations.

2. Repair all removed or damaged pavement, gutters, curbs, sidewalks, sign posts, trees, and landscape damaged by operations to their original or better condition after work is completed.

3. Restore the permanent roadway in accordance with requirements of the City and County of Honolulu or the State of Hawaii Department of Transportation (HDOT).

B. Testing: Measure and certify ground-resistance for each ground rod. Upon completion of the work, submit in writing to the HART and respective communications utility owners the measured ground resistance of each ground rod and grounding system, and the resistance and soil conditions at the time the measurements were made.

END OF SECTION

This page intentionally left blank.

SECTION 34 01 13

OPERATION AND MAINTENANCE OF ROADWAYS

PART 1 – GENERAL

1.01 SUMMARY

A. Description:

1. Furnish, install, maintain, and subsequently remove work zone traffic control devices and personnel. Work zone traffic control shall include providing flaggers and uniformed police officers.

B. Section Includes:

1. Work Zone Traffic Control

1.02 REFERENCES

A. Federal Highway Administration (FHWA):

1. FHWA Manual — Manual on Uniform Traffic Control Devices (MUTCD)

B. Hawaii Administrative Rules (HAR):

1. Title 19 Department of Transportation, Subtitle 5 Motor Vehicle Safety Office:
   a. Chapter 127.1 — Design, Construction, and Maintenance of Public Streets and Highways
   b. Chapter 128 — Design, Placement, and Maintenance of Traffic Control Devices
   c. Chapter 129 — Use of Traffic Control Devices at Work Sites on or Adjacent to Public Streets and Highways

C. Hawaii Revised Statutes (HRS):

1. HRS Chapter 286 — Highway Safety

D. State of Hawaii Department of Transportation Standard Specifications (HSS):

1. HSS Section 645 — Work Zone Traffic Control

E. National Cooperative Highway Research Program (NCHRP):

1. Report 350 — Recommended Procedures for the Safety Performance Evaluation of Highway Features

1.03 SUBMITTALS

A. General: Refer to Section 7.7 – Submittal Procedures, and Section 7.8 – Shop Drawings, Product Data, and Samples, for submittal requirements and procedures.

B. Submit Federal Highway Administration approval letters certifying compliance with National Cooperative Highway Research Program Report 350 for signs, sign supports,

barricades, delineators, cones, vertical panels, and other traffic control devices in accordance with HSS Subsection 645.02 – Materials.

C. Submit traffic control plans and modifications and deviations to accepted traffic control plans in accordance with HSS Subsection 645.03 – Construction.

D. Submit advisory sign shop drawings in accordance with HSS Subsection 645.03(G) – Advisory Signs.

E. Submit "Notice to Motorists" in accordance with HSS Subsection 645.03(H) – Advertisement.

1.04 QUALITY ASSURANCE

A. General: Refer to Section 7.10 – Quality Assurance, for quality assurance requirements and procedures.

PART 2 – PRODUCTS

2.01 MATERIALS

A. Work Zone Traffic Control: conform to HSS Subsection 645.02 – Materials.

PART 3 – EXECUTION

3.01 WORK ZONE TRAFFIC CONTROL

A. Provide work zone traffic control in accordance with HSS Subsection 645.03 – Construction with the following amendment:

1. Amend HSS Subsection 645.03(F) – Lane closures by revising the first paragraph from line 248 to 249 read:

   "Lane closures will be allowed only from 8:30 a.m. to 3:30 p.m., Monday through Friday, or as specified on the plans."

B. Keep roads for public traffic open and in passable condition; providing and maintaining temporary access crossings for trails, bike paths, businesses, parking lots, garages, residences, farms, parks, and other driveways; take necessary work precautions for the protection, safety, and convenience of the public; should pedestrian facilities exist, take necessary measures for safe and accessible passage, with route information and Americans with Disabilities Act Accessibility Guidelines for Buildings and Facilities compliance, for pedestrians traveling through or near work zone.

C. Take safety and precautionary measures, such as illuminating roadway obstructions during hours of darkness, in accordance with Chapter 286, Hawaii Revised Statutes (HRS); Title 19, Subtitle 5, Chapters 127.1, 128, and 129, Hawaii Administrative Rules (HAR); and Manual on Uniform Traffic Control Devices.

END OF SECTION

SECTION 34 41 00

ROADWAY SIGNALING AND CONTROL EQUIPMENT

PART 1 – GENERAL

1.01 SUMMARY

A. Description:

1. Furnishing, installing, modifying, or replacing traffic signal system

B. Section Includes:

1. Traffic Signal System

1.02 REFERENCES

A. State of Hawaii Department of Transportation Standard Specifications (HSS):

1. HSS Section 623 Traffic Signal System

1.03 SUBMITTALS

A. General: Refer to Section 7.7 – Submittal Procedures, and Section 7.8 – Shop Drawings, Product Data, and Samples, for submittal requirements and procedures.

B. Submit material and equipment purchase requisition to the State of Hawaii Department of Transportation and City and County of Honolulu Department of Transportation Services in accordance with HSS Subsection 623.03(A) – Equipment List and Drawings.

C. Submit controller assembly and auxiliary equipment testing plan and procedure in accordance with HSS Subsection 623.03(G)(2)(a) for acceptance before starting tests.

D. Submit copies of manufacturer's warranty in accordance with HSS Subsection 623.03(I) – Warranty.

1.04 QUALITY ASSURANCE

A. General: Refer to Section 7.10 – Quality Assurance, for quality assurance requirements and procedures.

The cable manufacturer shall be ISO 9001 registered

PART 2 – PRODUCTS

2.01 MATERIALS

A. Traffic Signal System: Conform to HSS Section 623.02 – Materials with the following amendment:

1. Amend HSS Section 623.02 by adding the following after line 132:

"Pedestrian Signal Push Button with Integral Sign 770.12

Interconnect/Fiber Optic Subduct 770.13"

B. Traffic Signal Materials: Conform to HSS 770 – Traffic Signal Materials with the following amendments:

1. Amend HSS Subsection 770.02(A)(1)(b) – Traffic Signal Heads by revising the first paragraph from line 211 to 216 to read:

"(b) To ensure quality and performance, LED head shall have prior history of testing and use by CALTRANS and shall exceed ITE standards. Failure on one LED shall not affect the other LEDs. LED head shall have fully encapsulated electronic circuitry and configuration for 12-inch ball.

2. Amend HSS Section 770.04 – Pedestrian Signal from line 444 to 600 to read:

"(A) Purpose.

"The purpose of this specification is to provide the minimum requirements for the LED "walking person" and "hand" icon pedestrian signal modules with countdown. This specification is only for the nominal overall message-bearing surface of 16 x 18 in. This specification is not intended to impose restrictions upon specific designs and materials that conform to the purpose and the intent of practices described in "Pedestrian Traffic Control Signal Indications" published in the *Equipment and Materials Standards of the Institute of Transportation Engineers*, (referred to in this document as "PTCSI") and in the Applicable Sections of the Manual on Uniform Traffic Control Devices (MUTCD) 2003 Section 4E.

(B) Physical and Mechanical Requirements.

The modules shall fit into existing pedestrian signal housings built for the PTCSI sizes stated in Section 1 of the "walking person" and "hand" icon pedestrian signal indications Standard without modification to the housing and shall not require special tools for installation.

Installation of a retrofit replacement module into existing pedestrian signal housing shall only require the removal of the existing optical unit components, shall be weather tight and fit securely in the housing; and shall connect directly to existing electrical wiring. The LED module shall have a visual appearance similar to that of an incandescent lamp (ie: Smooth and non-pixilated). Screwed on lenses are not allowed. Only modules with internal mask shall be utilized. No external silk-screen shall be permitted.

When not illuminated, the WALKING PERSON, UPRAISED HAND, and COUNTDOWN DIGITS shall not be readily visible. The countdown digits of the pedestrian signal module shall be located to the right of the associated UPRAISED HAND. The display of the number of remaining seconds shall begin only at the beginning of the pedestrian change interval. After the countdown displays zero, the display shall remain dark until the beginning of the next countdown. The walking person, hand icons and countdown digits shall be incandescent looking.

The units shall not have any external attachments, dip switches, toggle switches or options that will allow the mode to be changed from counting the clearance cycle, to the full walk/don't walk cycle or any other modification to the icons or digits.

For each nominal module, use the corresponding minimum H (height) and W (width) measurements:

Module Size	Icon Height	Icon Width	Countdown Height	Countdown Width	Countdown Segment Width
(16 x 18 in)	11 in	7in	9in	7in	0.7 in

All exposed components of a module shall be suitable for prolonged exposure to the environment. As a minimum, the module shall be rated for use in the ambient operating temperature range, measured at the exposed rear of the module, of-40°C to +74°C (-400F to +165°F).

The module shall be a single, self-contained device, not requiring on-site assembly for installation into an existing pedestrian signal housing. The power supply shall be located inside the pedestrian signal module. The assembly and manufacturing process for the module shall be designed to assure all internal LED and electronic components are adequately supported to withstand mechanical shock and vibration from high winds and other sources.

The front window shall be a transparent polycarbonate material with internal masking to prevent the icons and digits from being visible when not in operation. External masking or silk-screen technology shall not be permitted.

Each module shall be identified on the backside with the manufacturer's name, model, serial number and operating characteristics. The operating characteristics shall include the nominal operating voltage and stabilized power consumption, in watts and/or Volt-Amperes.

(C) Photometric Requirements.

For a minimum period of 60 months, maintained minimum luminance values for modules under operating conditions, when measured normal to the plane of the icon surface, shall not be less than:

- Walking person: 2,200 cd/m^2
- Hand: 1,400 cd/m^2
- Countdown digits: 1,400 cd/m^2

The luminance of the emitting surface, measured at angles from the normal of the surface, may decrease linearly to a value of 50% of the values listed above at an angle of 15 degrees. The LED module shall have a visual appearance similar to that of an incandescent lamp (ie: Smooth and non-pixilated).

Maximum permissible luminance: When operated within the temperature range, the actual luminance for a module shall not exceed three times the required peak value of the minimum maintained luminance. Luminance uniformity: The uniformity of the signal output across the emitting section of the module lens (i.e. the hand, person or countdown icon) shall not exceed a ratio of 5 to 1 between the maximum and minimum luminance values (cd/m^2).

The standard colors for the LED Pedestrian Signal Module shall be White for the walking person and Portland Orange for the hand icon and the countdown digits.

(D) Electrical Requirements.

All wiring and terminal blocks shall meet the requirements of Section 13.02 of the VTCSH Standard. Maximum of three secured, color coded, 1 meter (39 in) long 600 V, 16 AWG minimum, jacketed wires, conforming to the National Electrical Code, rated for service at +105°C, are to be provided for electrical connection. The conductors shall be color coded with orange for the hand, blue for the walking person and white as the common lead.

LED modules shall operate from a 60 ± 3 Hertz ac line power over a voltage range from 80 to 135 VAC RMS. Nominal operating voltage for all measurements shall be 120 ± 3 VAC RMS. Fluctuations in line voltage over the range of 80 to 135 VAC RMS shall not affect luminous intensity by more than ± 10 %. To prevent the appearance of flicker, the module circuitry shall drive the LEDs at frequencies greater than 100 Hz when modulated, or at DC, over the voltage range specified.

Low Voltage Turn Off: There should be no illumination of the module when the applied voltage is less than 35 VAC RMS. To test for this condition, each icon must first be fully illuminated at the nominal operating voltage. The applied voltage shall then be reduced to the point where there is no illumination. This point must be greater than 35 VAC RMS.

Turn-ON and Turn-OFF Time: A module shall reach 90% of full illumination (turn-ON) within 75 msec of the application of the nominal operating voltage. The signal shall cease emitting visible illumination (turn-OFF) within 75 msec of the removal of the nominal operating voltage.

Default Condition: For abnormal conditions when nominal voltage is applied to the unit across the two-phase wires (rather than being applied to the phase wire and the neutral wire) the pedestrian signal unit shall default to the hand symbol. The on-board circuitry of a module shall include voltage surge protection:

- To withstand high-repetition noise transients and low- repetition high-energy transients as specified in NEMA Standard TS-2 2003; Section 2.1.8
- Section 8.2 IEC 1000-4-5 & Section 6.1.2 ANSI/IEEE C62.41.2-2002, 3kV, 2 ohm
- Section 8.0 IEC 1000-4-12 & Section 6.1.1 ANSI/IEEE C62.41.2-2002, 6kV, 30 ohm

The LED signal and associated on-board circuitry shall meet the requirements of the Federal Communications Commission (FCC) Title 47, Subpart B, Section 15 regulations concerning the emission of electronic noise by Class A digital devices. The modules shall provide a power factor of 0.90 or greater when operated at nominal operating voltage, and 25°C (77°F). Total harmonic distortion induced into an AC power line by the module, operated at nominal operating voltage, and at 25°C (77°F) shall not exceed 20%.

The current draw shall be sufficient to ensure compatibility and proper triggering and operation of load current switches and conflict monitors in signal controller units. Off State Voltage Decay: When the module is switched from the On state to the Off state the terminal voltage shall decay to a value less than 10 VAC RMS in less than100 milliseconds when driven by a maximum allowed load switch leakage current of 10 milliamps peak (7.1 milliamps AC).

(E) Module Functions

The module shall operate in one mode: Clearance Cycle Countdown Mode Only. The module shall start counting when the flashing don't walk turns on and will countdown to "O" and turn off when the steady "Don't Walk" signal turns on. The module shall not have user accessible switches or controls for the purpose of modifying the cycle, icons or digits. At power on, the module enters a single automatic learning cycle. During the automatic learning cycle, the countdown display shall remain dark. The unit shall re-program itself if it detects any increase or decrease of Pedestrian Timing. The digits shall go blank once a change is detected and then take one complete pedestrian cycle (with no counter during this cycle) to adjust its buffer timer.

The module shall allow for consecutive cycles without displaying the steady Hand icon ("Don't Walk"). The module shall recognize preemption events and temporarily modify the crossing cycle accordingly. If the controller preempts during the walking man, the countdown shall follow the controller's directions and shall adjust from walking man to flashing hand. It shall start to count down during the flashing hand. If the controller preempts during the flashing hand, the countdown shall continue to count down without interruption. The next cycle, following the preemption event, shall use the correct, initially programmed values. This specification is worded such that the flashing don't walk time is not modified.

If the controller output displays Don't Walk steady condition or if both the hand/person go dark and the unit has not arrived to zero, the unit suspends any timing and the digits shall go dark.

(F) Warranty

Manufacturers will provide the following warranty provisions. Replacement or repair of an LED signal module that fails to function as intended due to workmanship or material defects within the first 5 years (60 months) from the date of delivery."

3. Amend Subsection 770.05(A)(2) – Controller Equipment, Controller Assembly by replacing Table 770.05-1 – Controller Assembly Requirement with the following:

TABLE 770.05-1 - CONTROLLER ASSEMBLY	
REQUIREMENTS	
Item	Quantity
Model 170 Controller	1
Model 412C Prom Module	1
Model 400 Modem	1
332A Aluminum Cabinet	1

Model 200 Load Switches	12
Model 204 Flasher	All
Model 242 Isolators	2
Model FS/ST Isolator	All
Flash Transfer Relays	All
Model 210 Conflict Monitor (Crimp and Poke Type, such as Molex Dualcon TM Straight/on Edge Dual Position Connectors, or approved equal)	1
Model 262C Detector Amplifiers (Rotary Sw Type)	8
Model M752 Preempt. Car (Non-QPL)	2
Model GPS Time Source (Non-QPL)	1

4. Amend Subsection 770.05(B)(6) – Controller Equipment, Model 170E Controller by deleting line 643.

5. Amend Subsection 770.05(C)(5) – Controller Equipment, Cabinet by deleting lines 660 to 665.

6. Amend Subsection 770.05(D)(2) – Controller Equipment Auxilliary Equipment from line 712 to 741 to read:

   "(2) Security Tumbler for Signal Cabinet. The signal control cabinet door locks (2 locks for each cabinet) are keyed to take Best Lock Series tumblers. The contractor shall furnish and install 2 lock cylinders that will fit in the current locks on the signal cabinet. The lock cylinders keys shall be one of a kind, licensed to the City and County of Honolulu, and each cylinder shall have 1 set of keys with "do not duplicate" stamped on each key.

   (3) GPS Time Source. The GPS time source unit shall be a precision Time Standard for use on 170 Traffic Signal Controllers. It utilizes time signals broadcast from the GPS satellite network and is traceable to the National Institute of Standards (NIST). The unit incorporates a precision GPS receiver and a microprocessor to decode the time signals and interface to the traffic control equipment.

   The standard features of the GSP unit shall include, but not limited to, Time and date information includes Year, Month, Day, Hour, Minute, and Second, All functions are automatic, no jumpers or switches to set, Time zone, baud rate, and Daylight savings operation set with dumb terminal, User set parameters stored in non-volatile EEPROM, 24 hour backup for time keeping, Standard 3 wire RS232 interface, Automatic daylight savings and leap second time corrections, LED status indicator, operates on controller +5 Volts from communications port, antenna mounts to top of cabinet, and no external wires to run."

7. Amend subsection 770.06(G) – Type 7 Preemption Detector (Opticom) Cables from line 792 to read:

   "furnished with its own cable running back to controller cabinet. M138"

8. Add Subsection 770.12 – Pedestrian Signal Push Button with Integral Sign to read:

"(A) Description. The pedestrian push button unit shall consist of an assembly that can be secured to traffic poles with standard screws, be tamper proof, weatherproof, and constructed so that electrical shocks are impossible to receive.

(B) Materials.

(1) The housing for the push button assembly shall be of cast and/or machined aluminum. The push button assembly shall be weatherproof with a water diverting groove set in the outside diameter of the actuator button receptor. The housing shall be designed to reduce vandalism and shall mount on the side or top of a pole with a minimum 2-inch diameter button. The push button housing shall be capable of mounting in an 'up button' or 'down button' configuration. All wire connections shall be accessible from the back of the assembly.

(2) An ADA acceptable raised directional sign shall be installed with stainless steel fasteners to the housing. The sign shall consist of a raised walking person and a raised arrow indication. Paint the unit black and paint the raised walking person and arrow white. The sign shall be capable of mounting in an 'up button' or 'down button' configuration. The raised walking person and arrows shall be directional and match the indication as shown in the plans.

(3) The pushbutton shall extend from the sign faceplate approximately three inches. The pushbutton actuator shall be convex in design having a flat area on the face for uses of a stylus, ADA acceptable, two inches in diameter, and have a tension of less than five pounds when pressed. The button shall be manufactured in a way that it cannot be stuck in a closed (constant call) position.

(4) The pedestrian push button shall be a piezo electric type and be UL listed. The button shall have a stainless steel actuator and shall be mounted within the housing with stainless steel, non-corrosive, tamper proof fasteners. The unit shall operate between 12-24V DC or AC, 3 inch round mounts with 4 mounting bolts. The pedestrian button shall give an audio and visual signal each time the pedestrian button is activated."

9. Add Subsection 770.13 – Interconnect/Fiber Optic Subduct to read:

"(A) Description A non-metallic flexible textile raceway known as subduct, which is placed within PVC conduits. The subduct allows for the future communication upgrades, including transitioning from multipair copper cables to fiber optic media. To further that effort and achieve maximum conduit utilization, the interconnect/fiber optic conduits shall contain a subduct. The subduct shall consist of flexible, textile material, sometimes referred to as "fabric duct". The subduct shall be installed in the interconnect/fiber optic conduits.

(B) Textile Subduct The subduct shall consist of the following:

A. Standard Outdoor Textile subduct: Micro (33mm), 2-inch, 3-inch and 4-inch single or multi-cell polyester/nylon textile subduct containing 12501b polyester flat woven pull tape.

B. Conduit Plugs: Compression-type conduit plugs with locking nuts for sealing and securing one or more textile subducts within a conduit.

C. Pull Tape: The subduct pull tape shall be constructed of synthetic fiber, printed with accurate sequential footage marks and color-coded.

D. Duct Water Seal: products suitable for closing underground and entrance conduit openings where subduct is installed, to prevent entry of gases, liquids, or rodents into the structure.

(C) Installation The contractor shall protect the subduct from the effects of moisture, UV exposure, corrosion and physical damage during installation. The contractor shall install the subduct prior to installing the new interconnect and fiber optic cables.

The contractor shall provide textile subduct in conduits using continuous unspliced lengths of textile subduct between pull boxes, and/or termination points as indicated on the drawings.

The contractor shall make a 2" incision, approximately 18" from the end of textile subduct. Pull out and cut off approximately 2 feet of pull-tape. Thus allowing the pull tape ends to retract back into the cells.

Using approximately 6 feet of pull tape, tie a non-slip knot to the incision. Then tie 3 to 6 half-hitch knots down to the end of textile subduct. Apply black vinyl tape over all knots and the end of textile subduct. Using a Bow Line knot tie a swivel to the end of 3 feet pull tape. For multi-pack installations one swivel is sufficient, but stagger each textile subduct.

Using a Bow Line knot, attach the pull rope located in the rigid conduit to the other end of the swivel. Install textile subduct - ensuring that no twist is introduced to the subduct.

Provide suitable textile subduct slack in the pull boxes, and at turns to ensure there is no kinking or binding of the product.

At locations where textile subduct will be continuous through a pullbox, allow sufficient slack so that the subduct may be secured to the side of the pullbox maintaining the minimum bending radius.

At pullboxes serving as the junction location, pull the exposed end of the subduct to the far end of the pullbox, install termination bag, and secure to the pullbox.

Seal all conduit and textile subduct entering the pullboxes to prevent entrance into the pullboxes of gases, liquids or rodents."

PART 3 – EXECUTION

3.01 TRAFFIC SIGNAL SYSTEM

A. Furnish, install, modify, or replace traffic signal system in accordance with HSS Subsection 623.03 – Construction with the following amendment:

1. Amend Subsection 623.03(C)(7) from lines 255 to 258 to read as follows:

"(7) Conduits. Lay polyvinyl chloride (PVC) conduits carefully in trenches prepared to receive conduits. Concrete encase PVC Schedule 40 conduits."

END OF SECTION

This page intentionally left blank.