HART
HONOLULU AUTHORITY for RAPID TRANSPORTATION

IN REPLY REFER TO:
CMS-AP00ENV-00254

Daniel A. Grabauskas
EXECUTIVE DIRECTOR AND CEO

BOARD OF DIRECTORS

Carrie K.S. Okinaga, Esq.
CHAIR

Ivan M. Lui-Kwan, Esq.
VICE CHAIR

George I. Atta
Robert Bunda
Michael D. Formby
William "Buzz" Hong
Donald G. Horner
Keslie W.K. Hui
Damien T.K. Kim
Glenn M. Okimoto, Ph.D.

June 6, 2013

Ms. Pua Aiu, Ph.D., Administrator
State Historic Preservation Division
Department of Land and Natural Resources
Kakuhihewa Building, Room 555
601 Kamokila Boulivard
Kapolei, Hawaii 96707

Dear Dr. Aiu:

Subject: Request for Review of Proposed Bridge Rail Replacement for Kapālama Canal Bridge Per Programmatic Agreement Stipulation VIII.B.

The Honolulu Authority for Rapid Transportation (HART) is submitting the attached information for your review in compliance with the Programmatic Agreement Stipulation VIII.B which states:

> The bridge rails on the Kapālama Canal Bridge must be replaced or retrofitted to meet current safety standards. The City will maintain or replace the rails to match the appearance of the historic rails and to maintain existing views to and from the bridge. The City shall consider *The Secretary of the Interior's Standards for the Treatment of Historic Properties*, 36 C.F.R. pt. 68, in developing draft plans to provide to SHPD for review per Stipulation IV.

The existing bridge structure on Dillingham Boulevard over the Kapālama Canal was constructed in 1930 as a five-span reinforced concrete T-girder bridge. The bridge is approximately 113 feet long, 79.5 feet wide, and currently carries six (6) lanes of bi-directional traffic. In 2005, the existing structure was seismically retrofitted.

The bridge was determined to be eligible for the National Register of Historic Places under Criterion A for its association with the transportation history of the area and the extension of the Dillingham Boulevard as well as under Criterion C as an example of concrete bridge engineering and design in Hawai'i. Since the Honolulu Rail Transit Project proposed widening and installation of a future raised median are considered substantial bridge modifications, improvements must comply with current design and safety standards. Therefore the existing bridge rails on both sides of the bridge are required to be improved. See attached concrete railing drawing.

Rebuilding balustrades (rails) includes the following: duplicating the original design (identified locally as "paddleboard," similar to Texas Classic Railing Type C411 [modified opening to 4"] for base, wall, and cap; reducing width of the openings to meet code requirements without the need for an insert down the middle of each opening; reproducing the solid-to-void appearance of the original span

CITY AND COUNTY OF HONOLULU, Alii Place, Suite 1700, 1099 Alakea Street, Honolulu, Hawaii 96813
Phone: (808)768-6159 Fax: (808)768-5110 www.honolulutransit.org

although the number of openings will increase; rebuilding corner piers (columns) and duplicating the existing design including base, raised panel, and cap; duplicating the river rock perimeter wall design and construction on the *makai* side of the bridge by building with river rock matching existing in size, shape, and color; and tinting concrete mortar to match existing mortar color. (Note the perimeter wall design on the *mauka* side does not match the *makai* side. Only the *makai* side will be disturbed by the bridge widening activities.)

Texas Classic Railing Type C411 (modified opening to 4") has been selected to match the appearance of the historic rails and maintain the existing views to and from the bridge. The attached KAPĀLAMA CANAL BRIDGE WIDENING TYPE SELECTION MEMORANDUM for WIDENING DILLINGHAM BLVD BRIDGE OVER KAPĀLAMA CANAL (Bridge No. 147) (May 2013) provides detailed information on the railing selection.

HART is in the process of mitigating the adverse effect to the bridge through Historic American Engineering Record (HAER) Level II documentation (including 4x5 black and white photographs of side elevations and obliques; 8x10 negatives from 4x5 photographs of original plan and section drawings [1930] and narrative report). This is in compliance with PA Stipulation V.C. These requirements are clearly identified in the National Park Service (NPS) letter of June 29, 2011. Completion of this documentation and acceptance by NPS will be accomplished prior to commencement of construction activities outlined above that will impact this historic property and affect its NRHP integrity under Criterion C (PA Stipulation V.C.3).

Please indicate your concurrence that the action proposed is consistent with PA Stipulation VIII.B. This will enable continuation of design activities for this location.

If you have any questions regarding this matter, please do not hesitate to contact Mr. Stanley Solamillo, HART Architectural Historian, at (808)768-6187 or ssolamillo@honolulu.gov.

Sincerely,

Daniel A. Grabauskas
Executive Director and CEO

Enclosures

KAPĀLAMA CANAL BRIDGE WIDENING

TYPE SELECTION MEMORANDUM

for

WIDENING DILLINGHAM BLVD BRIDGE OVER KAPĀLAMA CANAL

(Bridge No. 147)

FOR THE

DESIGN OF THE HONOLULU RAIL TRANSIT
CITY CENTER SECTION
UTILITIES AND GUIDEWAY CONTRACT

Revision:	Date:	Description:
A	March – 2013	Draft Submittal
B	May - 2013	Final Submittal

TABLE OF CONTENTS

1-1 EXISTING STRUCTURE TYPE 1

1-2 HISTORIC EFFECTS REPORT FINDINGS 1

2-1 WIDENING TYPE SELECTION RECOMMENDATIONS 1

- **I. Introduction 1**
- **II. Design Criteria 2**
- **III. Design Alternatives 2**
- **IV. Maintenance Issues 3**
- **V. Construction Issues 3**

3-1 SEISMIC DESIGN AND REHABILITATION STRATEGY 4

APPENDICES:

- **A. GENERAL PLAN A1**
  PARTIAL BRIDGE DEMOLITION
  TEXAS CLASSIC RAILING TYPE C411 (MOD)
- **B. GENERAL PLAN QUANTITIES B1**
- **C. PRELIMINARY FOUNDATION REPORT C1**

1-1 EXISTING STRUCTURE TYPE

The existing bridge structure on Dillingham Boulevard over the Kapālama Canal was constructed in 1930 as a five-span reinforced concrete T-girder bridge. The bridge is approximately 113 ft long, 79.5 ft wide and currently carries 6 lanes of bi-directional traffic. Three foot (3'-0") high concrete railings and 10 ft wide concrete sidewalks flank both sides of the bridge. The deck structure consists of a 5" thick reinforced concrete deck under the sidewalk and a 9" thick reinforced concrete deck under the roadway travel lanes with a 1½" asphalt overlay.

The superstructure consists of fourteen (14) concrete T-beams with concrete diaphragms within five spans, each approximately 21'-9" in length.

The substructure is comprised of concrete abutments and pile bents. The abutments are supported on a continuous concrete pile cap with 10 concrete piles. A 5'-0" deep reinforced concrete backwall exists below the abutment cap. Each of the four pile bents is founded on 14 concrete piles. All piles are 14" square precast concrete piles with a typical length of 30 feet.

Several utilities are carried on the existing bridge or encased in the canal below. Located in the first interior cell just inside the mauka side of the bridge are two waterlines (12" and 18" in diameter). Near the center of the bridge and located in the canal bottom is an encased sewer line (36" diameter). Near the downstream side of the bridge and located in a cell are cable TV and telephone conduits. Located in the canal bottom just outside the makai edge of the bridge is an encased 42" diameter waterline. Existing overhead electrical lines/poles on the makai side of Dillingham must also be relocated to accommodate the widened bridge.

In 2005 the existing structure was seismically retrofitted including the addition of concrete shear keys and carbon composite laminate on each side of the existing pier caps.

1-2 HISTORIC EFFECTS REPORT FINDINGS:

The bridge was determined to be eligible for the NRHP under Criterion A for its association with the transportation history of the area and the extension of the Dillingham Blvd and under Criterion C as an example of concrete bridge engineering and design in Hawai'i. Since the proposed HRTP widening and installation of a future raised median are considered substantial bridge modifications, improvements must use current design and safety standards. Therefore the existing bridge rails on both sides of the bridge are required to be improved.

2-1 WIDENING TYPE SELECTION RECOMMENDATIONS

I. Introduction

The Kapālama canal Bridge (Widen) is located on Dillingham Blvd in the City and County of Honolulu and serves as a primary link between Kalihi and downtown Honolulu.

The proposed future Honolulu Rail Transit Guideway alignment and profile above Dillingham Blvd will require placement of support columns within a raised median occupying one of the existing lanes of traffic on the Kapālama Canal Bridge. The City and County of Honolulu proposes to widen the Dillingham Blvd corridor including this structure approximately 12 feet on the makai side (downstream side) to accommodate the aerial guideway improvements.

Figure 1: Kapālama Canal Bridge

II. Design Criteria

The design criterion for this structure includes:

- AASHTO LRFD 2010 Bridge Design Specifications
- HDOT Design Criteria for Bridges and Structures, October 2010.

III. Design Alternatives

Typically it is desirable to widen the bridge by matching the existing structure type and configuration. Due to the need to match the 2% cross slope of the roadway, match the minimum vertical clearance, and minimize the construction time and staging impacts associated with the widening, the use of precast girders is preferable over cast-in-place reinforced concrete Tee girders.

While several precast girder alternatives where considered and compared (i.e. precast prestressed concrete slab, precast prestressed double tee girder) the preferred economical alternative for the widening is a **precast prestressed double-tee girder** for the following reasons:

Applicability

Based on depth from the existing structure soffit to the top of existing pier cap, a structure depth of 1'-6" precast prestressed double-tee girder with an 8" (max and varies) reinforced concrete deck slab will meet the vertical clearance requirement.

Pros and Cons

Construction of a precast concrete bridge is typically faster because girders may be fabricated off-site while the substructure is under construction. The precast concrete girder option therefore reduces traffic impacts and enhances safety during construction. The structure depth of the precast double-tee girder is similar to that of the existing CIP reinforced concrete girder, so there will be less visual impact, i.e. the finished widening will have a similar look to the existing historical structure.

Texas Classic Barrier

To preserve the historic look of the existing concrete bridge railing with its 6" wide x 14" height openings, meet the current bridge railing height requirement of 42 inches, and meet the minimum FHWA-TL-2 crash test rating requirements, the Texas Classic Barrier Type C411 was selected as a replacement barrier. This barrier meets FHWA crash test requirements for a low speed roadway (less than 45 mph) and includes barrier openings of similar size and shape to those of the existing structure. It also provides the height increase necessary to meet current safety requirements. The width of the barrier opening was reduced to 4" to meet current HDOT requirements.

IV. Maintenance Issues

No major maintenance is required for precast prestressed concrete structures. To minimize seismic design issues and future conflicts when replacement of the existing bridge is deemed necessary, AECOM proposes to support the entire widening on new stand-alone pile caps separated and isolated from the existing structure with a longitudinal deck joint. No special maintenance is required for the longitudinal joint.

V. Construction Issues

Construction at the deck level will be isolated from the Dillingham Blvd road traffic by temporary K-railing located at the edge of the travel lane. Utilizing staged construction, the existing barriers and deck overhangs will be removed and the new deck and barrier rails constructed while maintaining existing traffic lanes. The new double tee girders will be placed from the existing bridge during several night shifts. The contractor may opt to use the trestle (see discussion of drilled shaft construction below) for girder placement.

During the bridge widening (Construction Stage 1), the makai sidewalk will be closed to pedestrian traffic while the mauka sidewalk remains open. During the mauka barrier replacement (Construction Stage 2), only the mauka sidewalk will be closed to pedestrian traffic. It is anticipated that shoring (sheet piling) will be required to extend the abutments and walls during Stage 1 widening. Based on consultation with the City and SHPD, the wall extension below the bridge is required to match the existing rock wall. A form liner with colored concrete was originally considered, however SHPD is requiring re-use of the existing stone.

To facilitate construction of the new foundations in the water, 24" diameter cased drilled shaft foundations are proposed for the widening structure. The existing piles will be

extracted. Should removal of an existing pile prove impossible, it will be cut below mudline and left in place. The proposed new pile spacing avoids the existing pile locations. Consideration was given to many different foundation types. Drilled shafts were selected based on the age and condition of the existing structure to reduce the potential for settlement of the existing foundations during installation of displacement piles. Our geotechnical consultant, Geolabs, provided conceptual foundation recommendations for this report. The final foundation recommendations will be provided as part of the future submittal of the City Center Geotechnical Report. A work trestle will be used to construct the drilled shafts across the canal.

3-1 SEISMIC DESIGN AND REHABILITATION STRATEGY

In 2005 the existing Kapālama Canal Bridge was reviewed and retrofitted by others. To avoid any new seismic issues between the proposed widening and the existing Kapālama Canal Bridge, AECOM proposes to support the new superstructure widening on an all new substructure. A simple open longitudinal joint will be placed in the deck between the widening and existing structure, and the new pier caps will stand alone and be separated by a gap instead of being connected to the existing piers.

Based on the Bridge Inspection Report dated April 2012, the bridge deck, superstructure, and substructure are rated as being in fair condition. The bridge's primary structural elements are sound but exhibit minor section loss such as cracking and/or spalling concrete.

In summary, AECOM proposes no new seismic retrofit or rehabilitation of the existing structure beyond the required replacement of the existing barriers as previously noted.

APPENDIX A

GENERAL PLANS
PARTIAL BRIDGE DEMOLITION
TEXAS CLASSIC RAILING TYPE C411

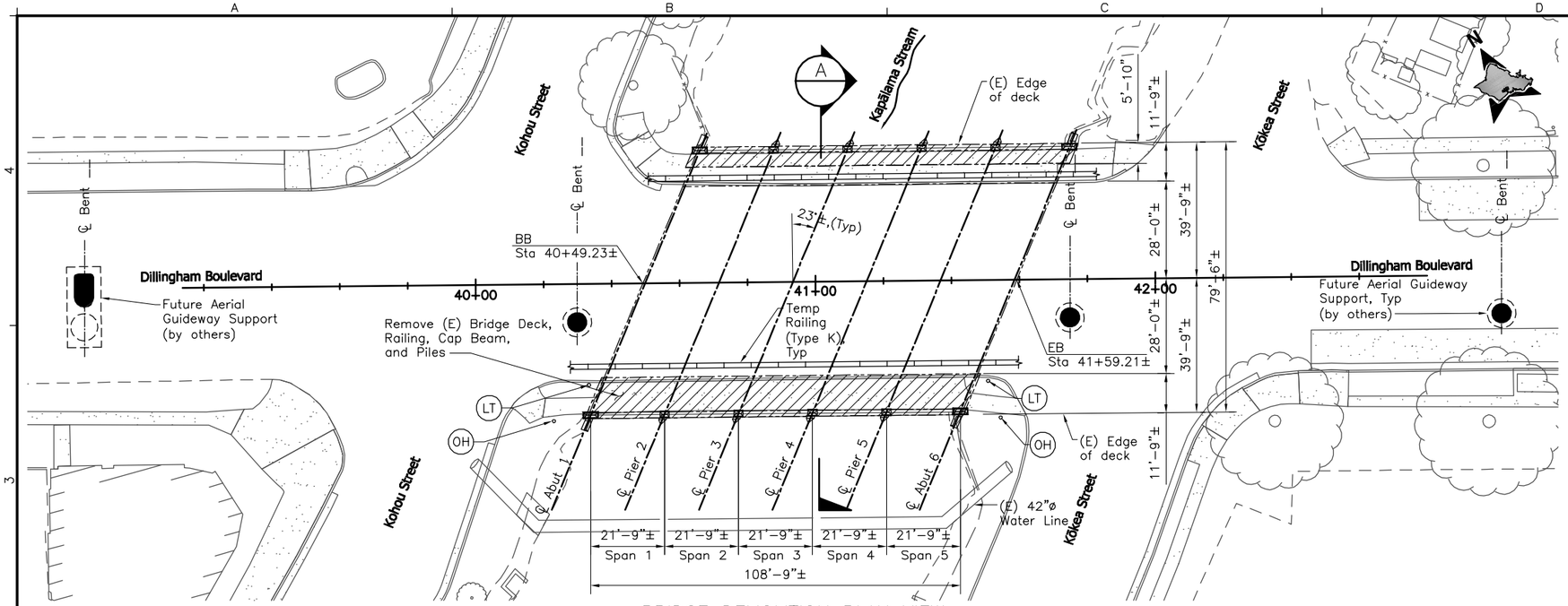

BRIDGE DEMOLITION PLAN VIEW

1"=20'

20' 0 20'

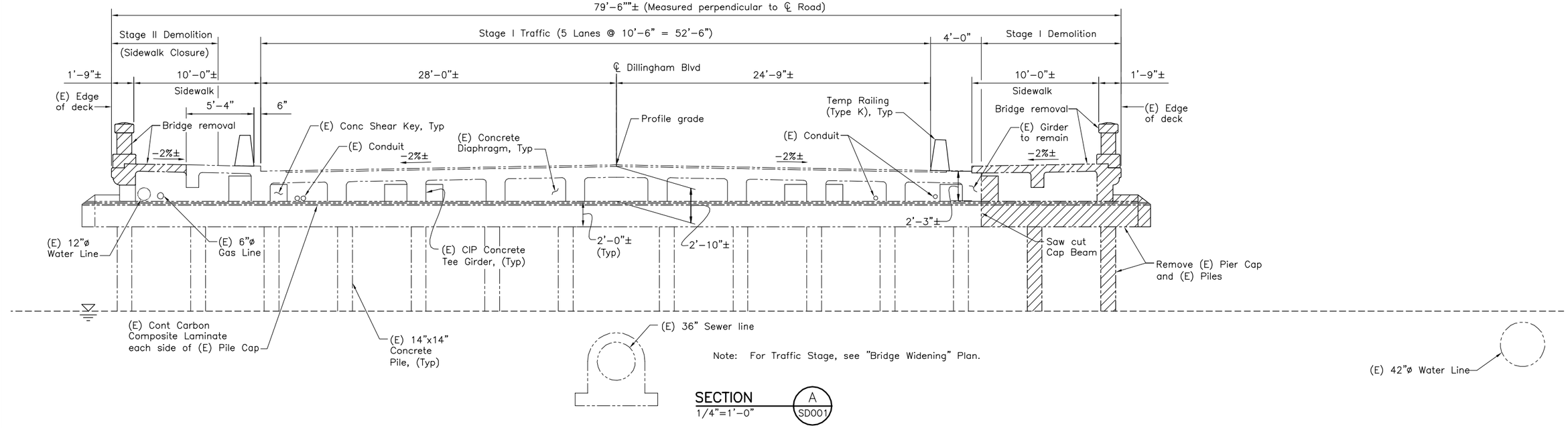

Note: For Traffic Stage, see "Bridge Widening" Plan.

SECTION A / SD001
1/4"=1'-0"

NOTES:

1. The contractor shall be responsible for planning and executing all procedures necessary to partially demolish and remove the bridge in a safe and controlled manner while preventing damage to the existing bridge to remain.
2. The contractor shall submit a complete bridge removal plan to the City & County of Honolulu. The bridge removal plan shall include details, procedures and sequence of the bridge demolition.
3. The remaining structure shall be stable during all stages of the removal operations.
4. Demolition operations shall be planned such that the utility lines are operating safely at all times. The utility lines shall be protected if affected by demolition operations. All work associated with utility lines shall be coordinated by the contractor with the respective utility companies.
5. The contractor shall contain, collect and dispose of construction debris, including airborne dust and debris, in compliance with applicable regulations.

LEGEND:

- Bridge Removal (portion)
- (OH) (E) OH Electrical Line Pole to be relocated
- (LT) (E) Street Light Pole to be relocated
- (E) Existing

Rev	By	Date	Description
A	WJ	03-19-13	Preliminary Engineering Update

PRELIMINARY ENGINEERING UPDATE

Designed: D Nguyen
Drawn: C Tu
Checked: W Jordan
Approved: W Jordan
Date: 03-19-13

HONOLULU RAIL TRANSIT PROJECT
HONOLULU AUTHORITY FOR RAPID TRANSPORTATION

Prime Consultant: AECOM
1001 Bishop Street, Suite 1600 – Honolulu, HI 96813

Subconsultant:

For reduced prints, original page size in inches: 0 1 2 3 4

CITY CENTER GUIDEWAY AND UTILITIES

KAPALAMA CANAL BRIDGE
PARTIAL BRIDGE DEMOLITION

Contract No.: SC-HRT-1200149
File: CC-G05-SD001
Drawing No: SD001 Rev. A
Scale: As Noted
Page No. of

2013-03-06 12:39 PM P:\Kapalama Canal Bridge\000_CAD\008_Structural\Sheets\CC-G05-SD001.dwg

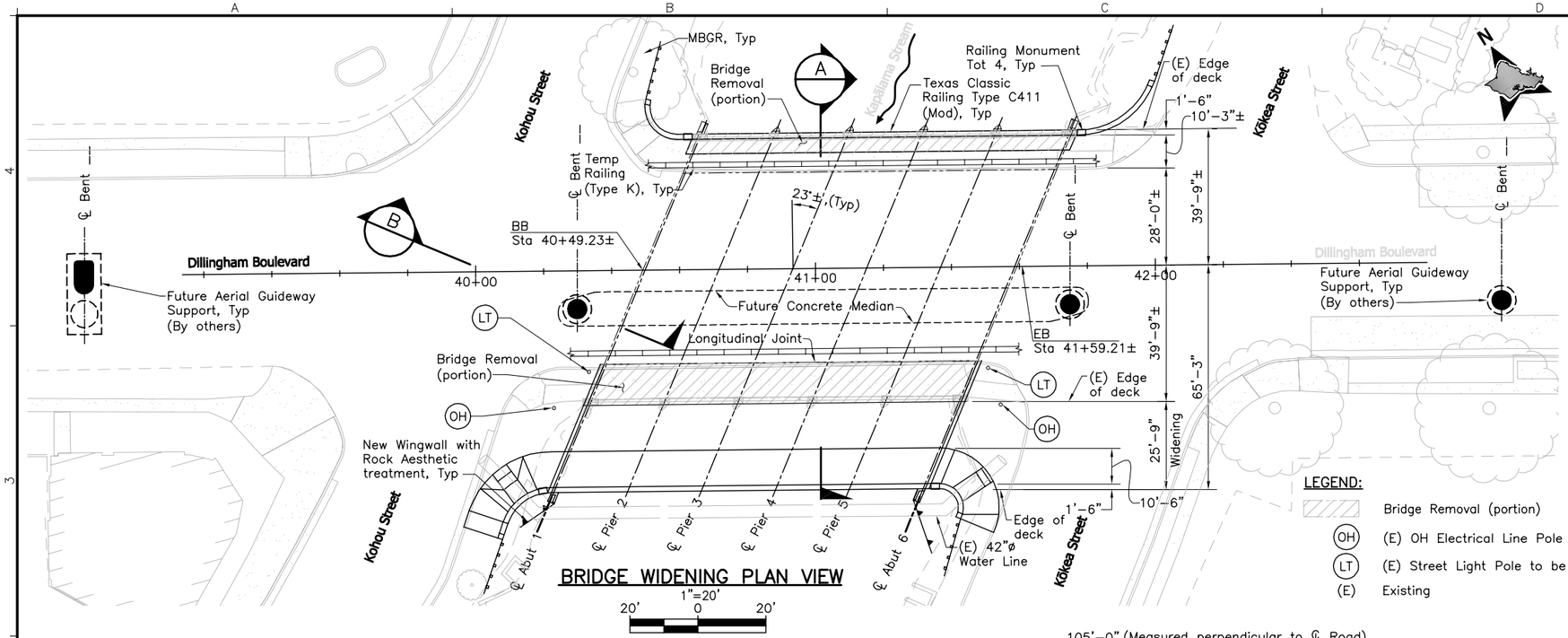

BRIDGE WIDENING PLAN VIEW

1"=20'

20' 0 20'

NOTES:

1. The bridge widening shall be constructed independently of the existing bridge.
2. The remaining structure shall be stable during all stages of the construction operations.
3. Bridge widening operations shall be planned such that the utility lines are operating safely at all times. The utility lines shall be protected if affected by construction operations. All work associated with utility lines shall be coordinated by the contractor with the respective utility companies.
4. The contractor shall contain, collect and dispose of construction debris, including airborne dust and debris, in compliance with applicable regulations.
5. Existing bridge railings shall be replaced with Texas Classic Railing Type C411(Mod).

LEGEND:

- Bridge Removal (portion)
- (OH) (E) OH Electrical Line Pole to be relocated
- (LT) (E) Street Light Pole to be relocated
- (E) Existing

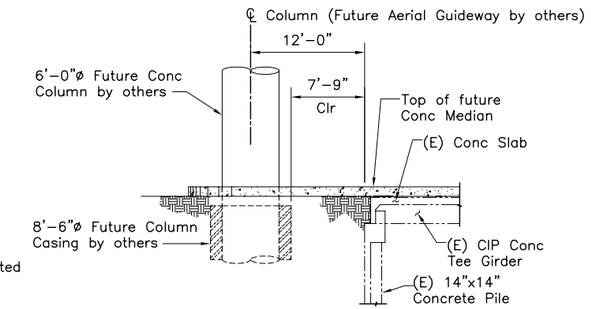

SECTION B

1/8"=1'-0" SD002

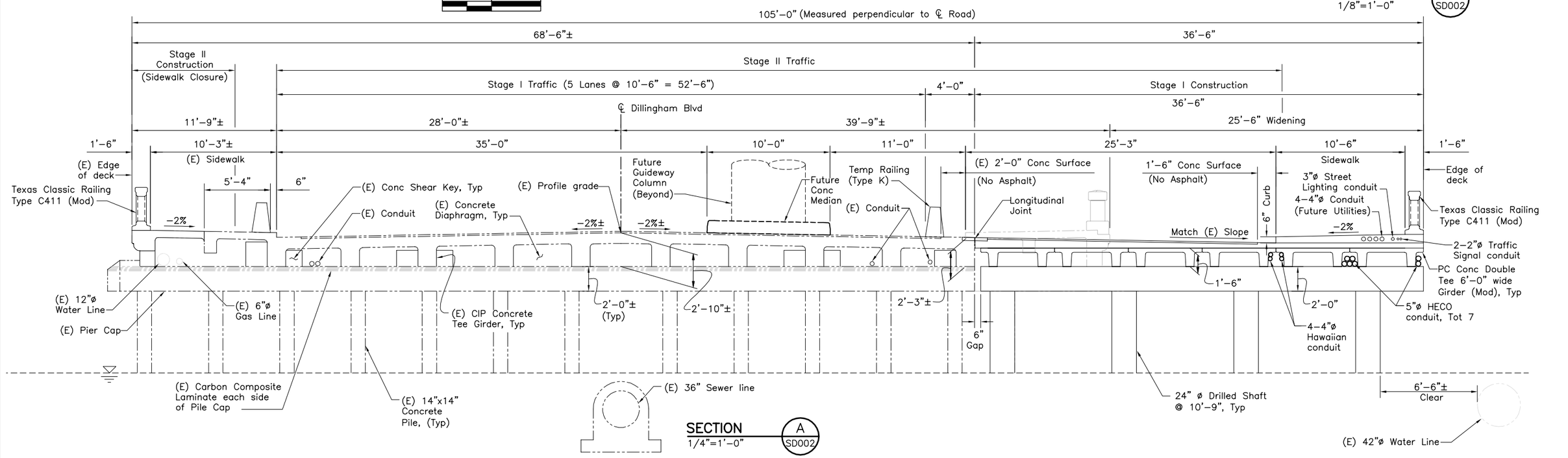

SECTION A

1/4"=1'-0" SD002

Rev	By	Date	Description
B	WJ	05-24-13	Preliminary Engineering Update
A	WJ	03-19-13	Preliminary Engineering Update

PRELIMINARY ENGINEERING UPDATE

Designed: D Nguyen
Drawn: C Tu
Checked: W Jordan
Approved: W Jordan
Date: 03-19-13

HONOLULU RAIL TRANSIT PROJECT
HONOLULU AUTHORITY FOR RAPID TRANSPORTATION

Prime Consultant: AECOM
1001 Bishop Street, Suite 1600 – Honolulu, HI 96813

Subconsultant:

For reduced prints, original page size in inches: 0 1 2 3 4

CITY CENTER GUIDEWAY AND UTILITIES

KAPALAMA CANAL BRIDGE
BRIDGE WIDENING

Contract No.: SC-HRT-1200149
File: CC-G05-SD002-OPT-2
Drawing No: SD002 Rev. A
Scale: As Noted
Page No. of

2013-05-24 9:54 AM P:\Kapalama Canal Bridge\000_CAD\008_Structural\Sheets\CC-G05-SD002-Opt-2 – Standard\CC-G05-SD002-Opt-2 – Standard\CC-G05-SD002-Opt-2.dwg

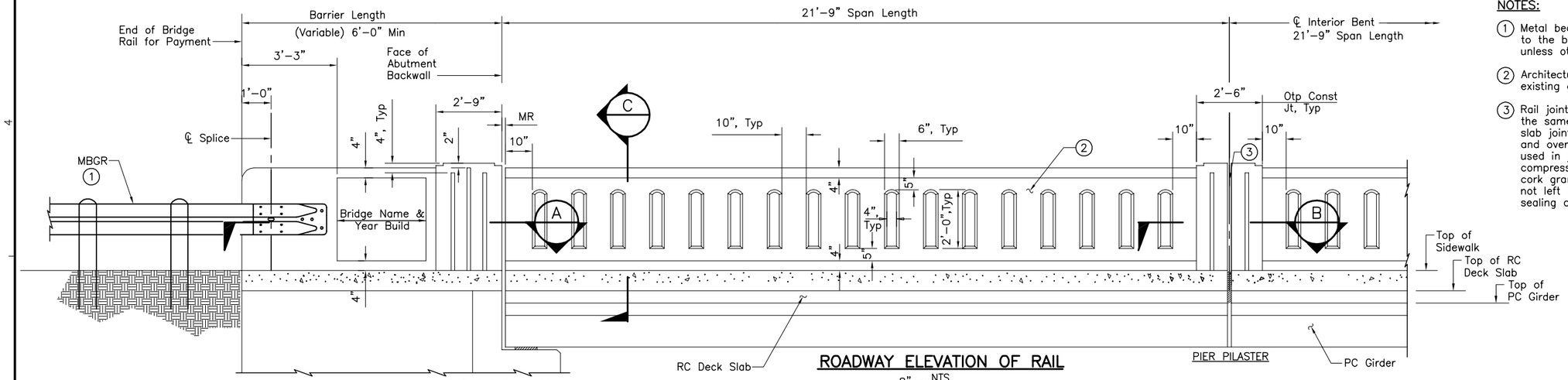

ROADWAY ELEVATION OF RAIL

NOTES:

1. Metal beam guard fence transitions must be attached to the bridge rail and extended along the embankment unless otherwise shown in the plans.
2. Architectural concrete and exposed aggregate finish, matching existing concrete barrier color.
3. Rail joints shall be provided at ends of all spans and shall be the same width as slab joint opening. Joints shall be open if slab joint opening is not sealed. Joints over construction joints and over sealed deck joints shall be plugged. forming material used in joints may be left in place if it is light in color and compressible, such as the following materials: polystyrene, molded cork granules, sponge rubber sheet, etc. If forming material is not left in place, the bottom 6" shall be plugged with slab joint sealing compound to prevent drainage and staining.

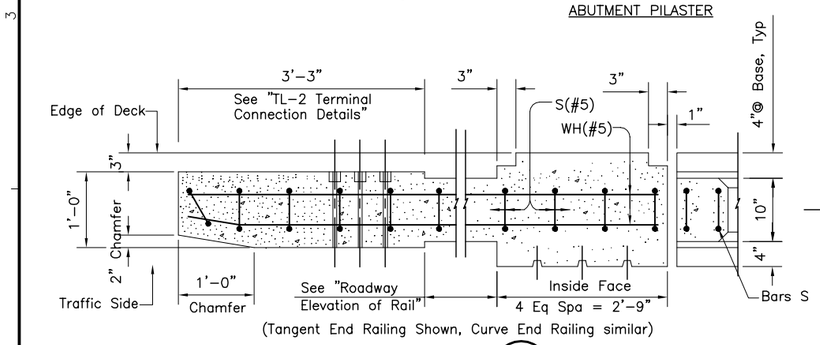

SECTION A
NTS SD003

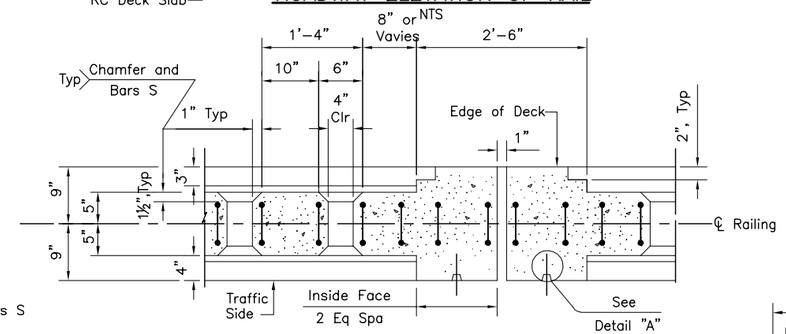

SECTION B
NTS SD003

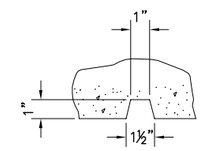

DETAIL A
NTS SD003

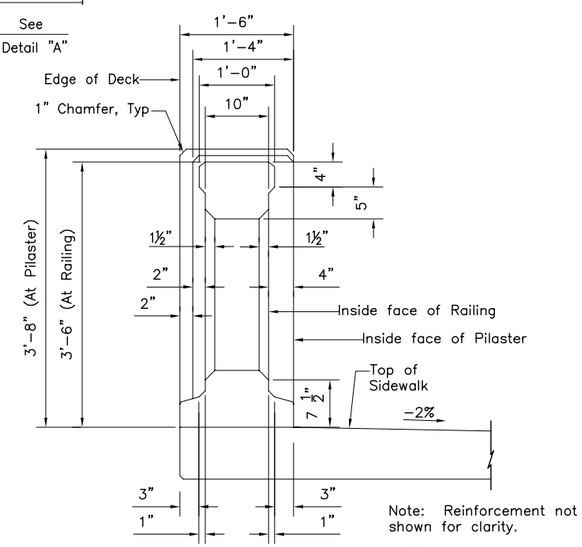

SECTION C
NTS SD003

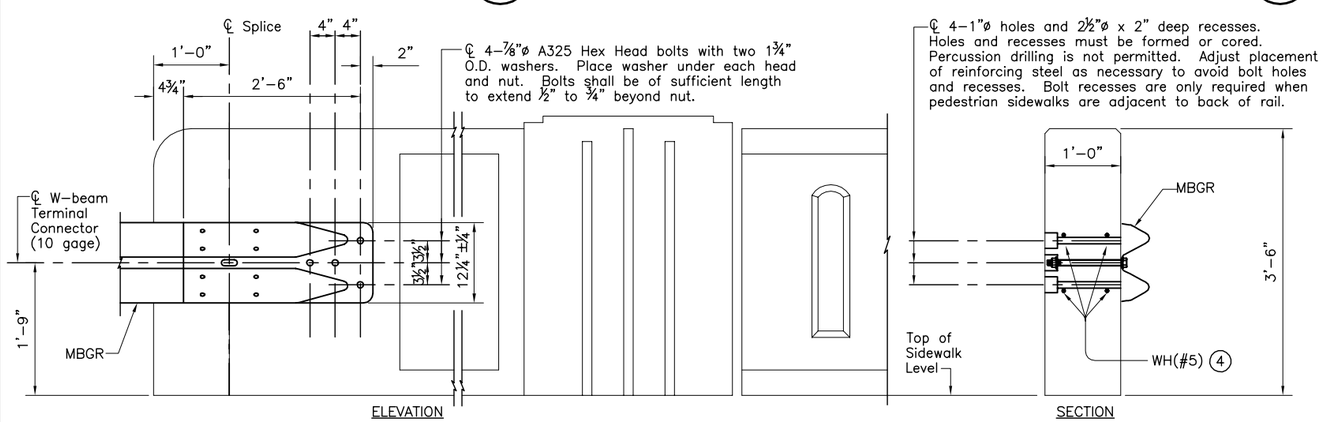

TL-2 TERMINAL CONNECTION DETAILS (Showing Parapet with Pilaster)
NTS

Rev	By	Date	Description
B	WJ	05-24-13	Preliminary Engineering Update
A	WJ	03-19-13	Preliminary Engineering Update

PRELIMINARY ENGINEERING UPDATE

Designed: D Nguyen
Drawn: C Tu
Checked: W Jordan
Approved: W Jordan
Date: 05-24-13

HONOLULU RAIL TRANSIT PROJECT
HONOLULU AUTHORITY FOR RAPID TRANSPORTATION

Prime Consultant: AECOM
1001 Bishop Street, Suite 1600 – Honolulu, HI 96813

Subconsultant:

For reduced prints, original page size in inches: 0 1 2 3 4

CITY CENTER GUIDEWAY AND UTILITIES

KAPALAMA CANAL BRIDGE
TEXAS CLASSIC RAILING TYPE C411(MOD)

Contract No.: SC-HRT-1200149
File: CC-G05-SD003
Drawing No: SD003
Rev. B
Scale: As Noted
Page No. of

2013-05-24 8:51 AM P:\Kapalama Canal Bridge\000_CAD\008_Structural\Sheets\CC-G05-SD003 – Standard\CC-G05-SD003.dwg

APPENDIX B

GENERAL PLAN QUANTITIES

City and County of Honolulu

BRIDGE GENERAL PLAN QUANTITIES

STRUCTURE:		**KAPALAMA CANAL BRIDGE (WIDEN)**					
TYPE:		PC P/S Double-Tee Girder on CISS Concrete Piling					
LENGTH	113	x WIDTH	36.5	= AREA	4,125	SQ FT	

	CONTRACT ITEMS	UNIT	QUANTITY
1	STRUCTURE EXCAVATION (BRIDGE)	**CY**	**54**
2	STRUCTURE BACKFILL (BRIDGE)	**CY**	**14**
3	DRIVE 24" DIA CAST-IN-STEEL-SHELL CONCRETE PILING	**EA**	**24**
4	FURNISH 24" DIA CAST-IN-STEEL-SHELL CONCRETE PILING	**LF**	**1,488**
5	STRUCTURAL CONCRETE, (BRIDGE)	**CY**	**210**
6	STRUCTURAL CONCRETE, (BRIDGE FOOTING)	**CY**	**27**
7	BAR REINFORCING STEEL (BRIDGE)	**LBS**	**53,100**
8	CONCRETE BARRIER TYPE TEXAS CLASSIC C411 (MOD)	**LF**	**301**
9	FURNISH PRECAST/ PRESTRESSED CONC DOUBLE-TEE GIRDER	**EA**	**30**
10	ERECT PRECAST/ PRESTRESSED CONC DOUBLE-TEE GIRDER	**EA**	**30**
11	JOINT SEAL (MR=1/2")	**LF**	**219**
12	MISCELLANEOUS METAL (BRIDGE)	**LBS**	**539**
13	TEMPORARY RAILING (TYPE K)	**LF**	**240**
14	RETAINING WALLS/ WINGWALLS	**SF**	**450**
15	ROCK AESTHETICS TREATMENT	**SF**	**300**
16	BRIDGE REMOVAL (cont. incl.)	**LS**	**1**

APPENDIX C

PRELIMINARY FOUNDATION REPORT

GEOLABS, INC.

Geotechnical Engineering and Drilling Services

TECHNICAL MEMORANDUM

DATE:	February 26, 2013	**TIME:**	9:49 AM
TO:	AECOM Technical Services, Inc.	**FROM:**	Robin M. Lim
ATTN:	Mr. Wally Jordan	**W.O. No.:**	6730-30
SUBJECT:	HRTP – City Center Section Kapalama Stream Bridge Widening Preliminary Drilled Shaft Recommendations	**NO. OF PAGES:**	2 (Text)
E-MAIL:	Wally.Jordan@aecom.com		
COPY TO:	File		

This technical memorandum presents our preliminary drilled shaft recommendations for the foundation design of the Kapalama Stream Bridge Widening project for the Honolulu Rail Transit Project (HRTP) – City Center Section Utilities and Guideway Contract. As you are aware, we have not been able to commence the geotechnical exploration program for the project. Therefore, the preliminary geotechnical recommendations for foundation design presented herein are based on the widely spaced available subsurface information along the alignment and our experience in the vicinity only.

The preliminary geotechnical recommendations for the bridge widening are subject to change based on the upcoming geotechnical exploration efforts. A detailed summary of our findings and recommendations will be contained in the geotechnical engineering report. The final report should be consulted when it becomes available.

Subsurface Conditions

Based on available information and our previous experience in the area, the Kapalama Stream Bridge site (at the abutment locations) is underlain by thin surface fills over recent alluvium (including lagoonal deposits) consisting of medium stiff to soft clayey silts and silty clays extending to depths of about 20 feet below the existing bridge deck. The recent alluvium is underlain by medium dense coralline detritus materials and older alluvial deposits, consisting of very stiff to hard clayey silts.

Drilled Shaft Foundations

Based on the available subsurface information and foundation loads provided, we recommend using deep foundations consisting of drilled shafts for foundation support of the proposed Kapalama Stream Bridge Widening. The drilled shafts foundations would derive support principally from adhesion between the drilled shaft and the medium dense coralline detritus and the very stiff to hard clayey silts. Based on the structural loads imposed on the foundations, we recommend using a minimum drilled shaft diameter of 18 inches with an embedment depth of 62 feet below the planned bottom of bent cap at about Elevation +4 feet MSL. The drilled shaft length is designed based on a strength limit state compression load capacity of up to 150 kips per drilled

shaft. For the extreme event limit state, a compression load capacity of 230 kips may be used in the drilled shaft design.

To facilitate construction of the drilled shafts, we recommend using permanent steel casing for the drilled shafts extending through the stream water to serve as pier columns. The permanent steel casing for the drilled shafts should have a minimum outside diameter (OD) of about 24 inches. The permanent casing (unbonded zone) should extend through the soft soil deposit (20 feet) and be embedded to a minimum casing tip elevation of about -20 feet MSL. The permanent steel casing should have a minimum wall thickness of 0.75 inches and shall be reduced for design purposes by a presumptive value of 0.25 inches for corrosion.

Our recommendations pertaining to the drilled shafts compression load capacity and length are presented in the following table.

COMPRESSION LOAD CAPACITY OF DRILLED SHAFT FOUNDATION					
Strength Limit State Compression Load Capacity (kips)	**Drilled Shaft Diameter** (inches)	**Permanent Steel Casing Outside Diameter** (inches)	**Cased Length** (feet)	**Preliminary Drilled Shaft Length** (feet)	**Preliminary Drilled Shaft Tip Elevation** (feet MSL)
150	18	24	24	60	-58

Closure

If you have questions regarding the contents of this technical memorandum or need additional information, please contact our office.